ASSOCIAÇÃO BRASILEIRA DOS FABRICANTES DE TUBOS DE CONCRETO

RELATÓRIO DE DIMENSIONAMENTO DE ASSOCIAÇÃO DE DUAS ADUELAS RETANGULARES MONOLÍTICAS DE CONCRETO

quinta-feira, 3 de outubro de 2019

ASSOCIAÇÃO BRASILEIRA
DOS FABRICANTES DE
TUBOS DE CONCRETO

DADOS DO FABRICANTE

NOME:
CPF/CNPJ:
ENDEREÇO: ,
BAIRRO:
CIDADE:
ESTADO: Não Informado
CEP:
TEL.:
CEL.:
E-MAIL:
SITE:

DADOS DO CLIENTE

NOME: DEFESA CIVIL DO ESTADO DE SÃO PAULO
CPF/CNPJ:
ENDEREÇO: ,
BAIRRO:
CIDADE:
ESTADO: Não Informado
CEP:
TEL.:
CEL.:
E-MAIL:
SITE:

DADOS DA OBRA

NOME: ADUELA 1,50 X 1,50 M PARA ATERRO DE 2,50 - LINHA DUPLA
ENDEREÇO: ,
BAIRRO:
CIDADE:
ESTADO: Não Informado
CEP:
TEL.:
CEL.:
E-MAIL:
SITE:

GEOMETRIA

```
SEÇÃO CONSTANTE.........................:  SIM
FINALIDADE..............................:  ÁGUAS PLUVIAIS
COMPRIMENTO (cl)........................:  1.00 m
LARGURA LIVRE (bl)......................:  1.50 m
ALTURA LIVRE (hl).......................:  1.50 m
ALTURA DA LAJE DA COBERTURA (hc)........:  0.15 m
ESPESSURA DAS PAREDES LATERAIS (hp).....:  0.15 m
ALTURA DA LAJE DA BASE (hb).............:  0.15 m
MÍSULA HOR. DA COBERTURA................:  0.20 m
MÍSULA VERT. DA COBERTURA...............:  0.20 m
MÍSULA VERT. DA BASE....................:  0.20 m
MÍSULA HOR. DA BASE.....................:  0.20 m
```

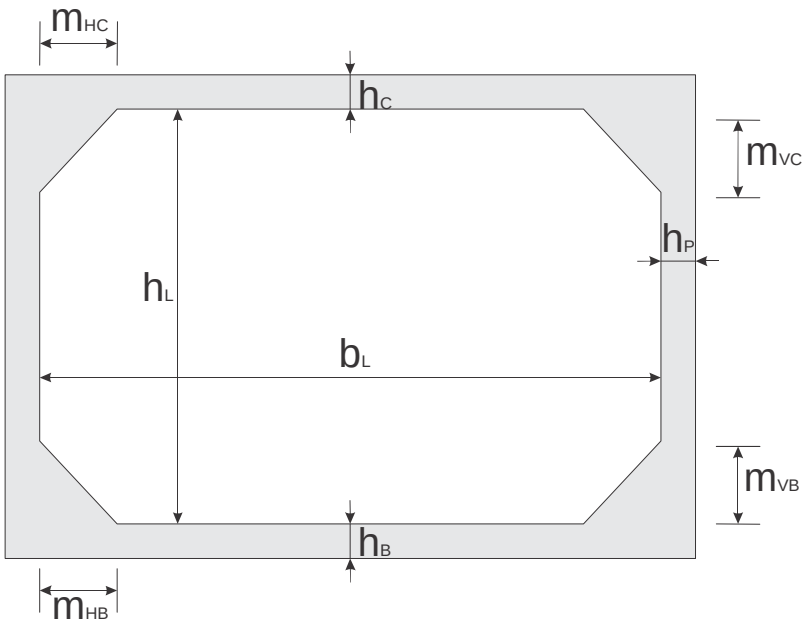

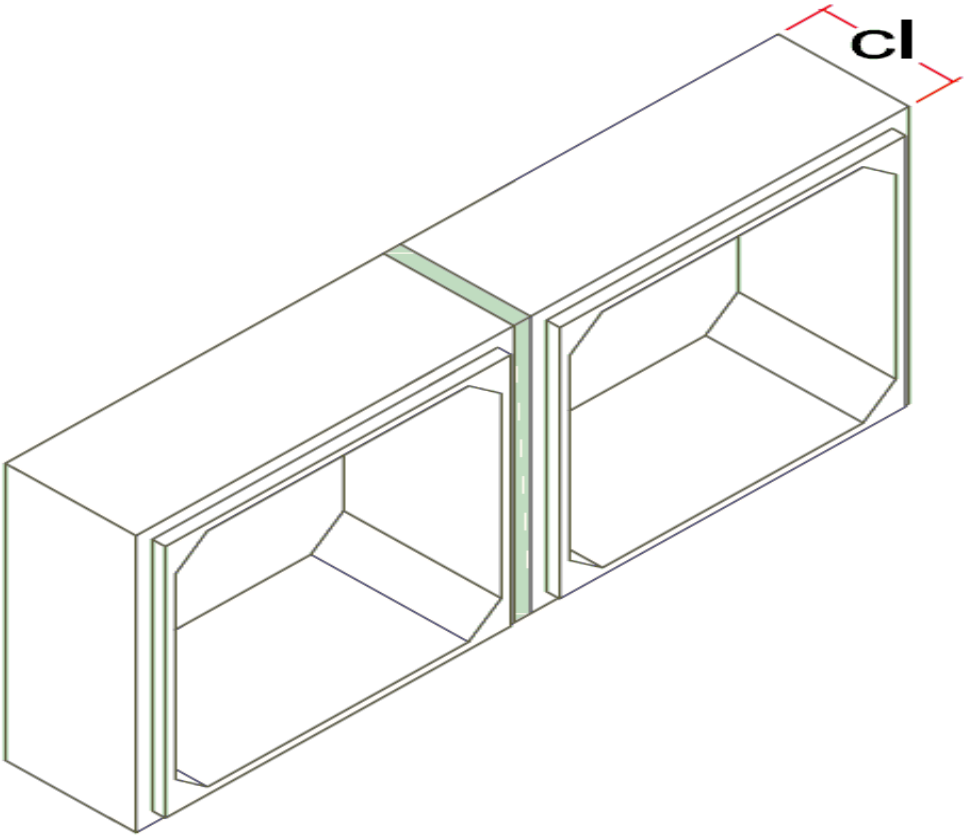

INSTALAÇÃO E MANUSEIO

ESPECIFICAÇÃO DO SOLO

PESO ESPECÍFICO.....: 18.00 kN/m³
ÂNGULO DE ATRITO.....: 30.00 graus
COEFICIENTE DE ATRITO ATIVO.....: 0.33
COEFICIENTE DE ATRITO ESTÁTICO.....: 0.50
COEFICIENTE DE ATRITO.....: 0.58

DADOS DE INSTALAÇÃO

ALTURA DE TERRA.....: 2.50 m
ESPESSURA DO PAVIMENTO.....: 0.30 m
EFEITO DO ARQUEAMENTO.....: NÃO CONSIDERADO
TIPO DE INSTALAÇÃO.....: ---
LARGURA DA VALA.....: ---
0.80 x Ka x COEFICIENTE DE ATRITO.....: 0.15
RAZÃO DE RECALQUE.....: ---

INFORMAÇÕES DE MANUSEIO

RESISTÊNCIA DO CONCRETO (fcj).....: 20.00 MPa
COEFICIENTE DE IMPACTO.....: 1.20
DISTÂNCIA DE IÇAMENTO.....: 50.00 cm

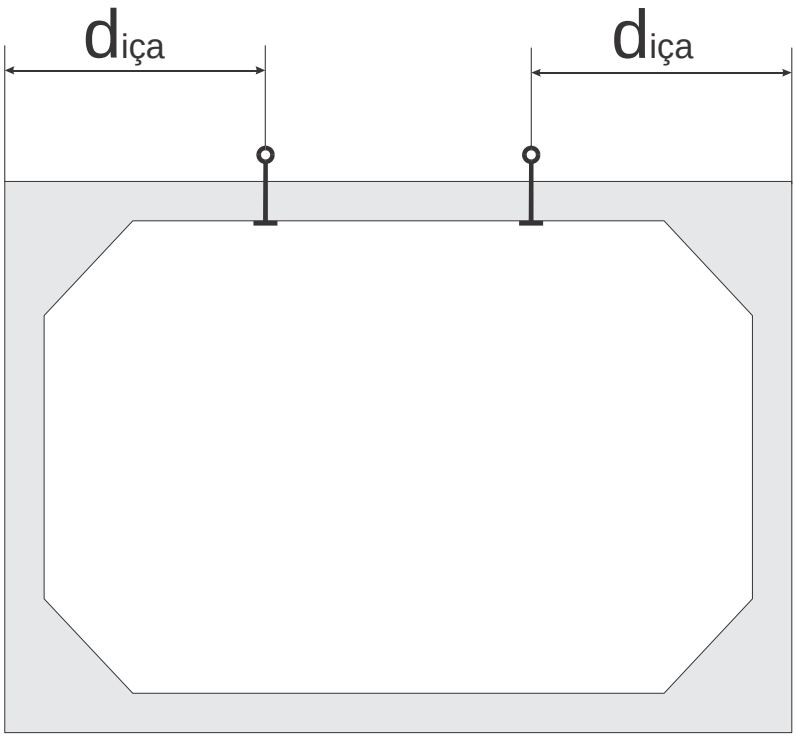

SOBRECARGA

```
TIPO DE SOBRECARGA.......................:  RODOVIÁRIO
TIPO DE TRÁFEGO..........................:  CLASSE 45
PESO DO VEÍCULO (Q)......................: 450.00 kN
DISTÂNCIA ENTRE EIXOS (ee)...............: 1.50 m
DISTÂNCIA ENTRE RODAS (er)...............: 2.00 m
ÁREA DE CONTATO DA RODA (ar)............: 0.20 m
ÁREA DE CONTATO DA RODA (br)............: 0.50 m
COEF. DE IMPACTO ADICIONAL...............: 1.25
COEF. DE IMPACTO EMPREGADO...............: 1.00
```

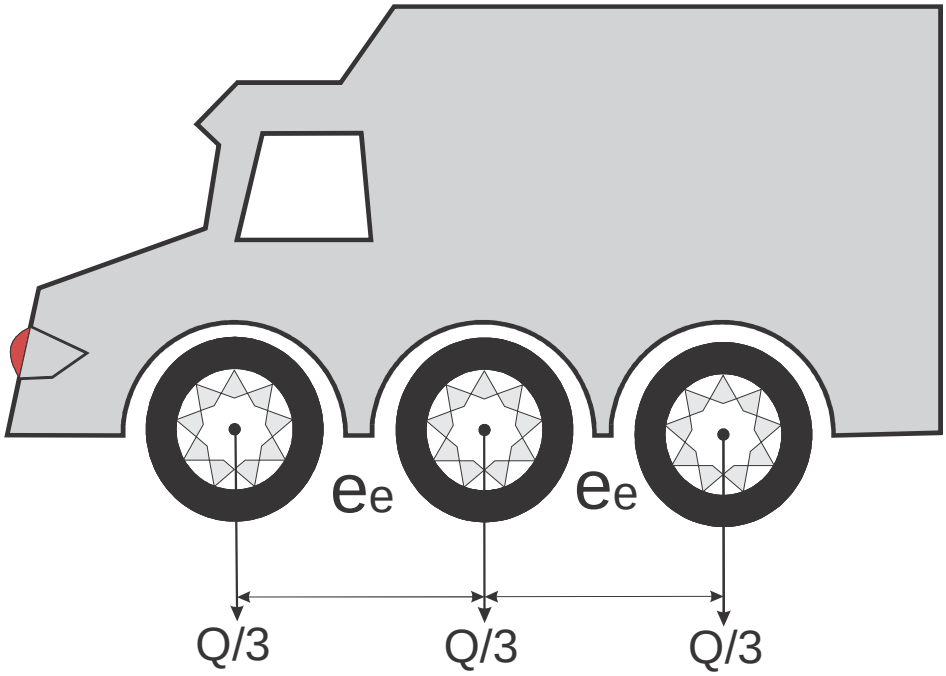

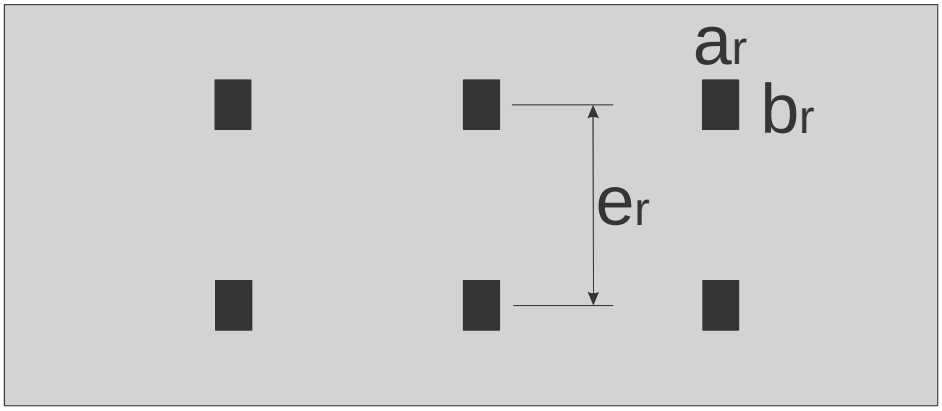

PARÂMETROS DA ARMADURA

```
ABERTURA MÁX. DAS FISSURAS..................:  0.20 mm
DIMINUIÇÃO DA RIGIDEZ.......................:  1.00
RESISTÊNCIA DA ARMADURA DO COROAMENTO.......:  190.00 MPa
RESISTÊNCIA DA ARMADURA DA QUINA............:  105.00 MPa
COEF. DE PONDERAÇÃO DO CONCRETO.............:  1.30
COEF. DE PONDERAÇÃO DO AÇO..................:  1.15
ESPAÇAMENTO MÍN. ENTRE ARMADURAS............:  5.00 cm
ESPAÇAMENTO MÁX. ENTRE ARMADURAS............:  35.00 cm
COBRIMENTO DAS ARMADURAS....................:  4.00 cm
TELA PADRÃO INTERNA.........................:  L283
TELA PADRÃO EXTERNA.........................:  L283
CONSIDERAR ANCOR. DA ARM. INT. P/ CORTANTE..:  SIM
```

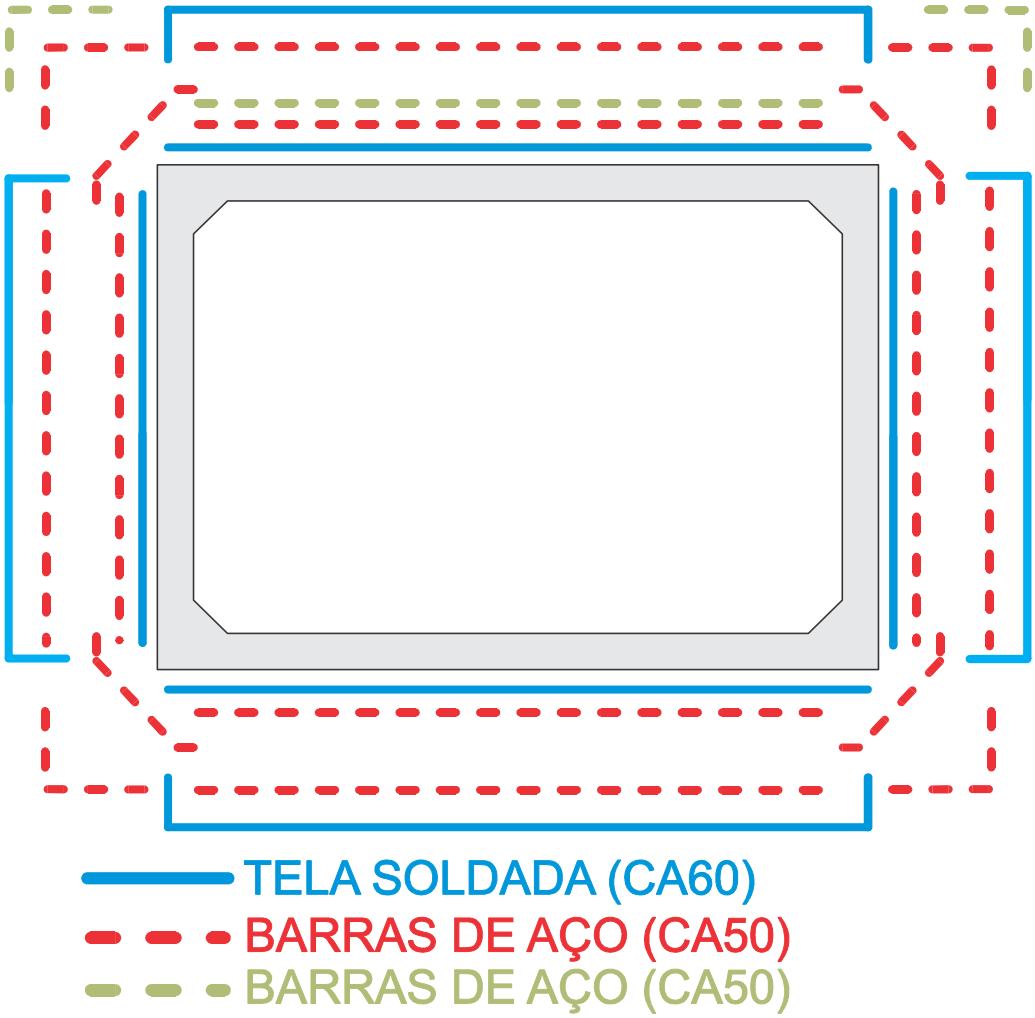

CRITÉRIOS E CONSTANTES

```
RESISTÊNCIA CARACTERÍSTICA DO CONCRETO..:  30.00 MPa
PESO ESPECÍFICO DO CONCRETO.............:  25.00 kN/m³
PESO ESPECÍFICO DO AÇO..................:  78.00 kN/m³
MÓDULO DE DEFORMAÇÃO LONGITUDINAL.......:  26071.59 MPa
MÓDULO DE REAÇÃO DO SOLO................:  25.00 MPa/m
COMPRIMENTO DO ELEMENTO FINITO..........:  20.00 cm
# ELS:
COEFICIENTE DE PONDERAÇÃO PESO PRÓPRIO..:  1.00
COEFICIENTE DE PONDERAÇÃO SOLO..........:  1.00
COEFICIENTE DE PONDERAÇÃO FISSURAÇÃO....:  0.50
COEFICIENTE DE PONDERAÇÃO FADIGA........:  0.80
# ELU:
- VmaxHmin:
COEFICIENTE DE PONDERAÇÃO CARGA MÓVEL V.:  1.50
COEFICIENTE DE PONDERAÇÃO ATERRO........:  1.35
COEFICIENTE DE PONDERAÇÃO PESO PRÓPRIO..:  1.30
COEFICIENTE DE PONDERAÇÃO SOLO..........:  1.00
COEFICIENTE DE PONDERAÇÃO ÁGUA..........:  1.20
- VminHmax:
COEFICIENTE DE PONDERAÇÃO ATERRO........:  1.00
COEFICIENTE DE PONDERAÇÃO PESO PRÓPRIO..:  1.00
COEFICIENTE DE PONDERAÇÃO SOLO..........:  1.35
COEFICIENTE DE PONDERAÇÃO CARGA MÓVEL H.:  1.50
- VmaxHmax:
COEFICIENTE DE PONDERAÇÃO CARGA MÓVEL V.:  1.50
COEFICIENTE DE PONDERAÇÃO ATERRO........:  1.35
COEFICIENTE DE PONDERAÇÃO PESO PRÓPRIO..:  1.30
COEFICIENTE DE PONDERAÇÃO SOLO..........:  1.35
COEFICIENTE DE PONDERAÇÃO CARGA MÓVEL H.:  1.50
```

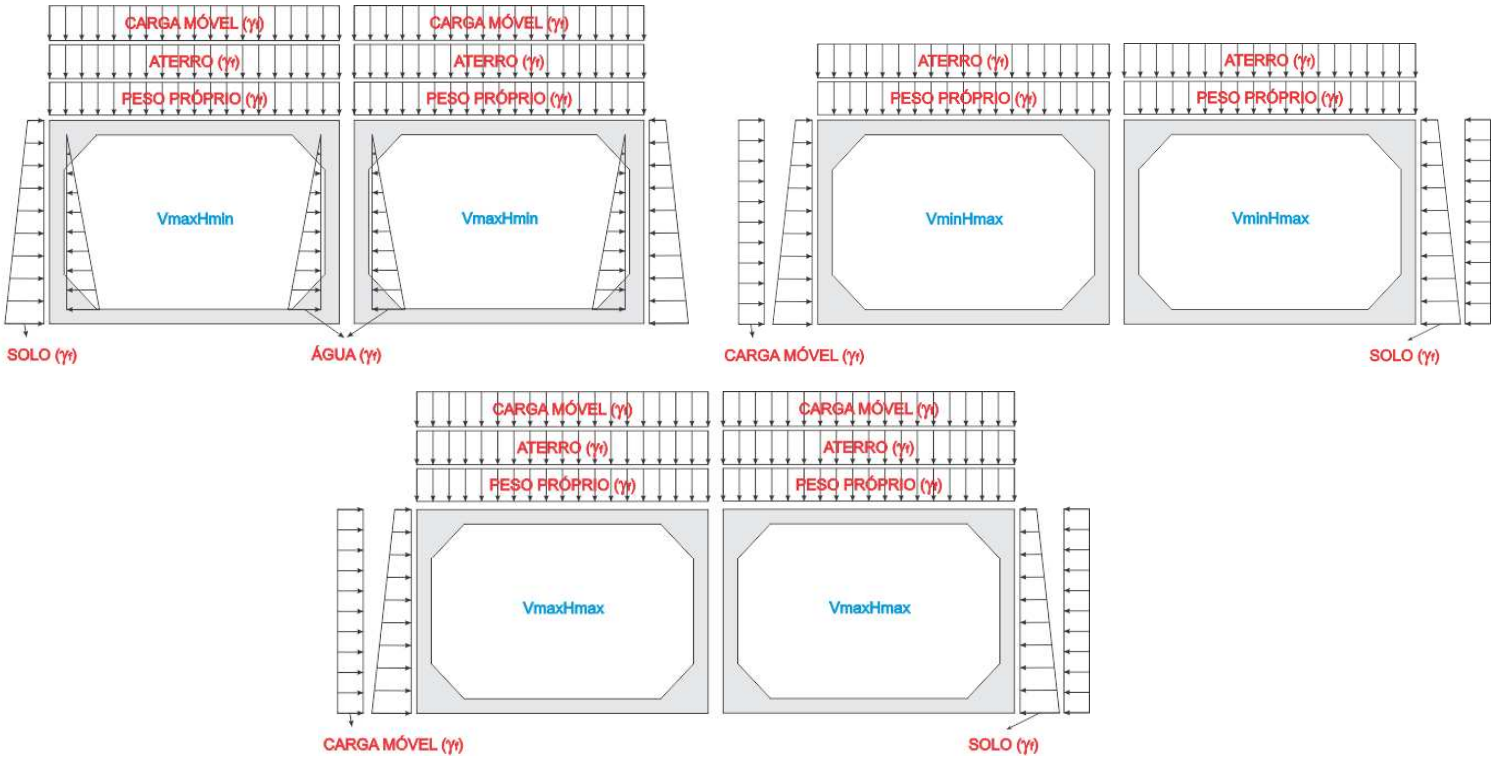

ESQUEMA P/ DETALHAMENTO

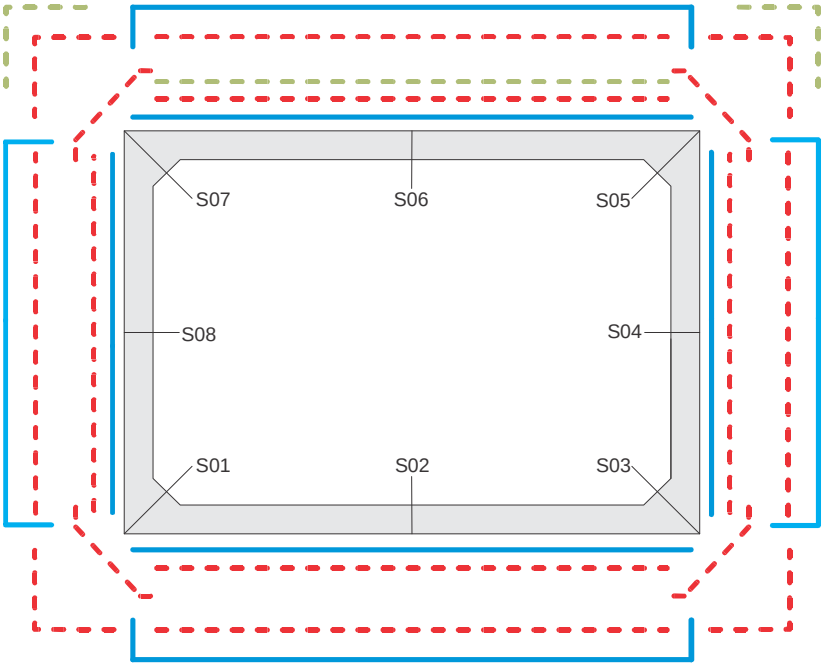

TELA SOLDADA (CA60) ARMADURA BÁSICA
BARRAS DE AÇO (CA50) ARMADURA COMPLEMENTAR
BARRAS DE AÇO (CA50) ARMADURA DE FADIGA

OBS.: VALORES POR METRO DE ADUELA.

	TELA	ARMADURA COMPLEMENTAR	ARMADURA DE FADIGA
LADO EXTERNO	T-S02: L283 T-S04: L283 T-S06: L283 T-S08: L283	B-S01: 0.22 cm² de área acima B-S02: 0.61 cm² de área acima B-S03: 0.22 cm² de área acima B-S04: 0.61 cm² de área acima B-S05: 0.22 cm² de área acima B-S06: 0.61 cm² de área acima B-S07: 0.22 cm² de área acima B-S08: 0.61 cm² de área acima	B-S05: 0.00 cm² de área acima B-S07: 0.00 cm² de área acima
LADO INTERNO	T-S02: L283 T-S04: L283 T-S06: L283 T-S08: L283	B-S01: 4 ø6.30 c/ 31 cm (0.00%) B-S02: 0.15 cm² de área acima B-S03: 4 ø6.30 c/ 31 cm (0.00%) B-S04: 0.61 cm² de área acima B-S05: 4 ø6.30 c/ 31 cm (0.00%) B-S06: 0.61 cm² de área acima B-S07: 4 ø6.30 c/ 31 cm (0.00%) B-S08: 0.61 cm² de área acima	B-S06: 0.00 cm² de área acima

NOTA: Os valores entre parênteses representam a percentagem de área de aço que a seção apresenta acima (porcentagem positiva) ou a menos (porcentagem negativa) em relação ao necessário (calculado) para o tipo de armadura correspondente (armadura complementar ou armadura de fadiga) e não em relação a área total de aço na seção que é o resultado das áreas de tela, armadura complementar e armadura de fadiga. Assim sendo, se uma seção apresenta (X %) de área acima ou abaixo para armadura complementar, esta porcentagem é calculada em função da área de armadura complementar necessária e não em relação a área total de aço.

ARMADURA DE CORTANTE

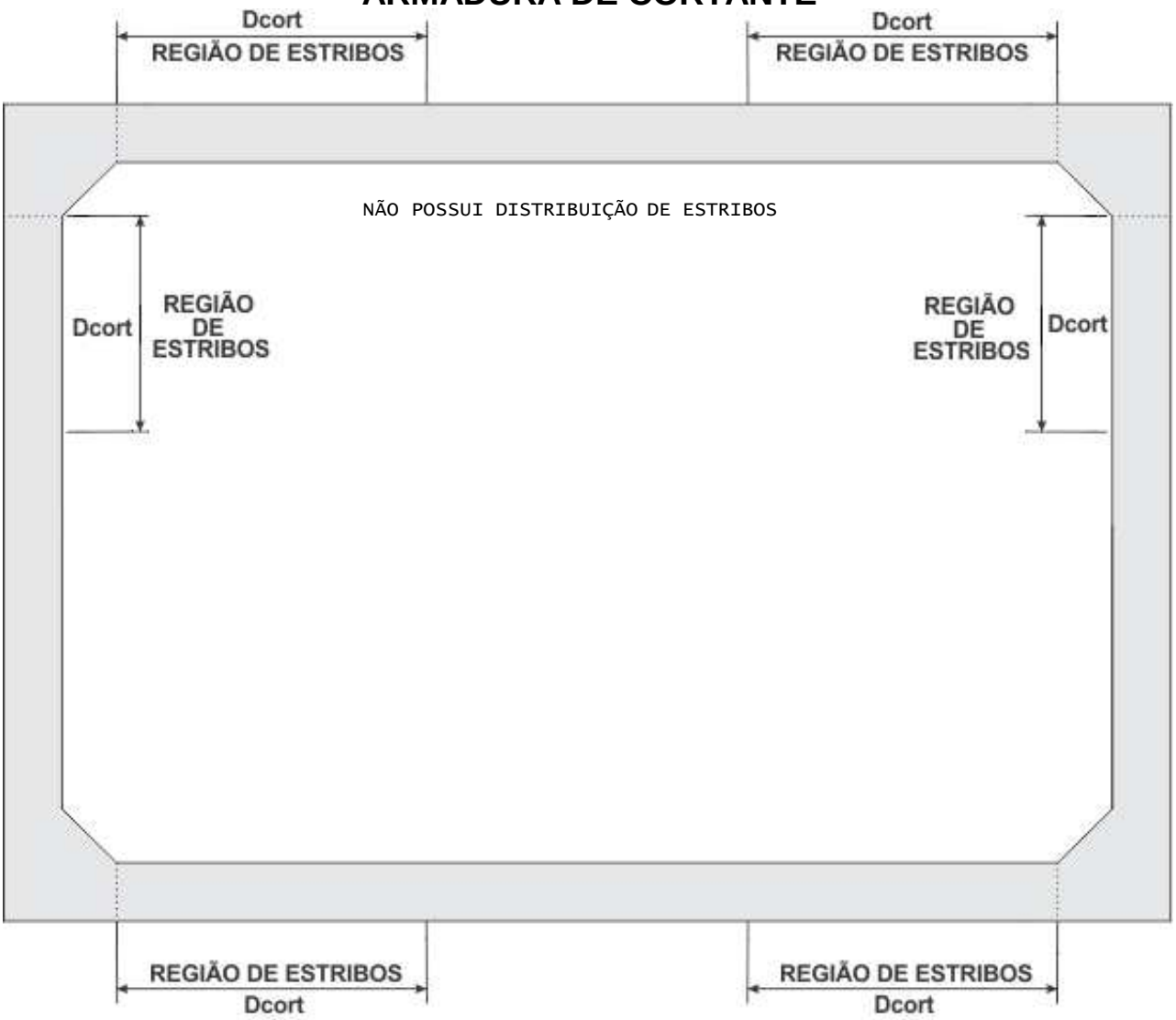

DISTRIBUIÇÃO (POR METRO LONGITUDINAL) DOS ESTRIBOS AO LONGO DE UMA FIADA:

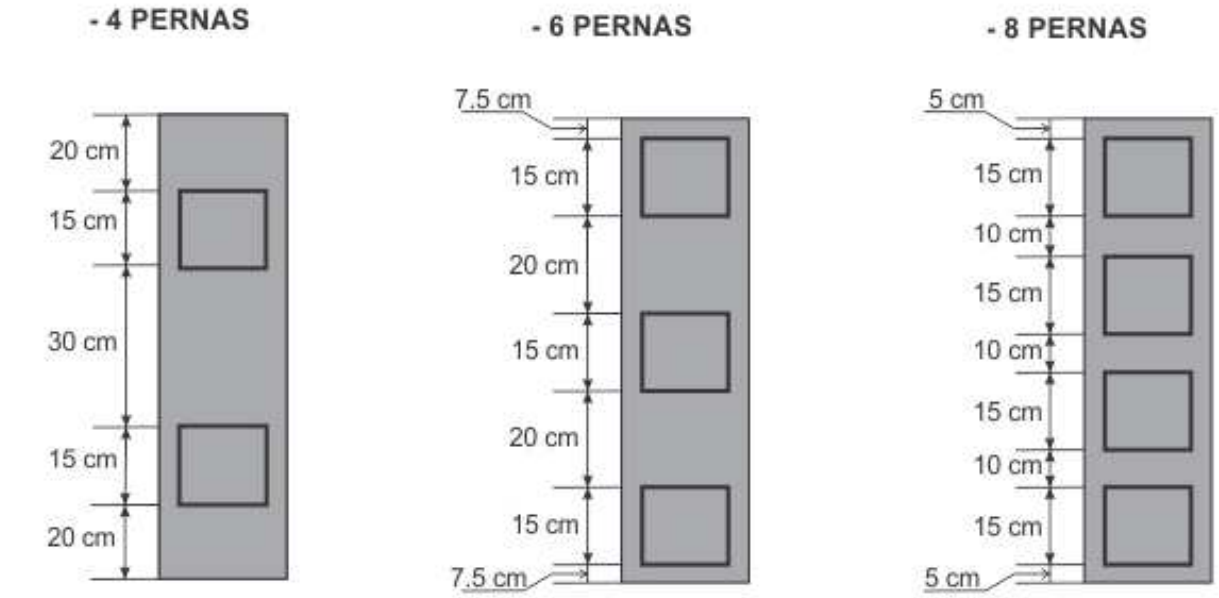

OBSERVAÇÃO:
Quando houver necessidade de armadura transversal, esta deve necessariamente ser colocada na laje de cobertura e na laje de fundo nas regiões apontadas na figura esquemática acima (REGIÃO DE ESTRIBOS). É RECOMENDADO ainda a colocação de armadura transversal nas partes superiores das paredes, repedindo o arranjo da armadura transversal das lajes de cobertura, a partir das quinas, em função de possíveis concentrações de pressões mútuas entre as células.

DESLOCAMENTOS

NOMENCLATURA DAS SEÇÕES PARA VERSÃO COMPLETA DO RELATÓRIO

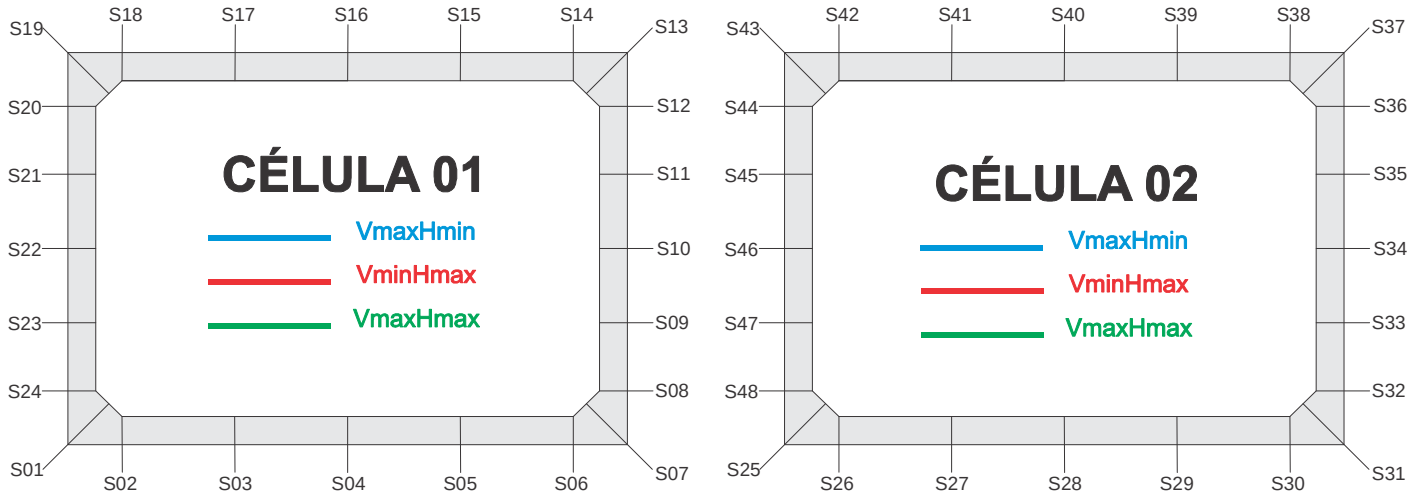

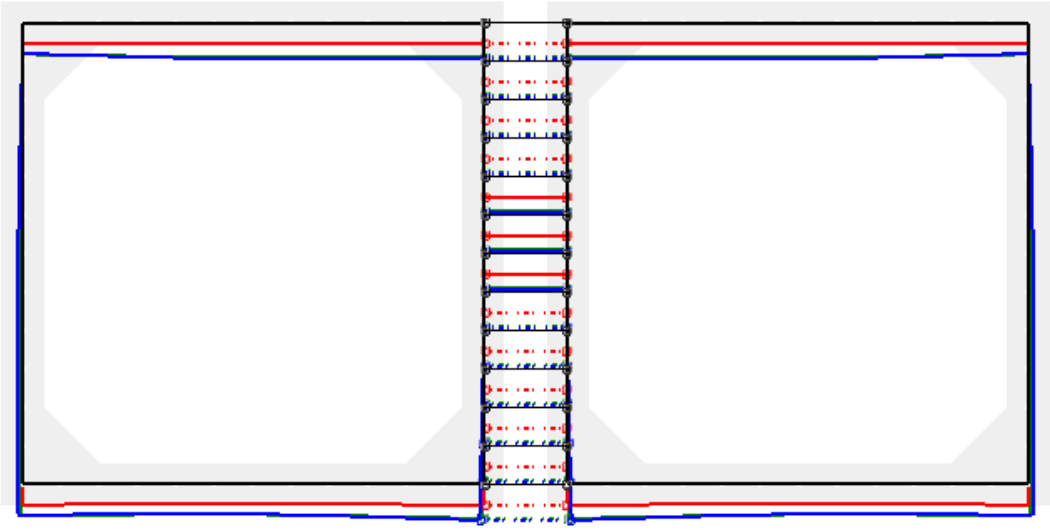

```
#######################################################
#            SOLICITAÇÕES NORMAIS (ELU)               #
#                      VmaxHmin                       #
#######################################################
-------------------------------------------------------
 DESLOCAMENTOS NAS SEÇÕES DE INTERESSE NAS DIR. X E Y
-------------------------------------------------------
| SEÇÃO|         DIREÇÃO X (m)|         DIREÇÃO Y (m)|
-------------------------------------------------------
|     1|            -5.79E-004|            -4.22E-003|
|     2|            -5.80E-004|            -4.10E-003|
|     3|            -5.80E-004|            -4.02E-003|
|     4|            -5.81E-004|            -4.07E-003|
|     5|            -5.82E-004|            -4.27E-003|
|     6|            -5.83E-004|            -4.59E-003|
|     7|            -5.83E-004|            -4.92E-003|
|     8|            -2.75E-004|            -4.92E-003|
|     9|            -6.82E-005|            -4.92E-003|
|    10|             6.57E-006|            -4.93E-003|
|    11|             9.19E-006|            -4.94E-003|
|    12|             3.22E-006|            -4.94E-003|
|    13|            -5.51E-006|            -4.95E-003|
|    14|            -5.10E-006|            -4.97E-003|
|    15|            -4.30E-006|            -5.01E-003|
|    16|            -3.50E-006|            -4.97E-003|
|    17|            -2.70E-006|            -4.81E-003|
|    18|            -1.91E-006|            -4.55E-003|
|    19|            -1.50E-006|            -4.25E-003|
|    20|            -2.92E-004|            -4.24E-003|
|    21|            -5.26E-004|            -4.24E-003|
|    22|            -6.70E-004|            -4.23E-003|
|    23|            -7.26E-004|            -4.23E-003|
|    24|            -6.86E-004|            -4.22E-003|
|    25|             5.83E-004|            -4.92E-003|
|    26|             5.83E-004|            -4.59E-003|
|    27|             5.82E-004|            -4.27E-003|
|    28|             5.81E-004|            -4.07E-003|
|    29|             5.80E-004|            -4.02E-003|
|    30|             5.80E-004|            -4.10E-003|
|    31|             5.79E-004|            -4.22E-003|
|    32|             6.86E-004|            -4.22E-003|
|    33|             7.26E-004|            -4.23E-003|
|    34|             6.70E-004|            -4.23E-003|
|    35|             5.26E-004|            -4.24E-003|
|    36|             2.92E-004|            -4.24E-003|
|    37|             1.50E-006|            -4.25E-003|
|    38|             1.91E-006|            -4.55E-003|
|    39|             2.70E-006|            -4.81E-003|
|    40|             3.50E-006|            -4.97E-003|
|    41|             4.30E-006|            -5.01E-003|
|    42|             5.10E-006|            -4.97E-003|
|    43|             5.51E-006|            -4.95E-003|
|    44|            -3.22E-006|            -4.94E-003|
|    45|            -9.19E-006|            -4.94E-003|
|    46|            -6.57E-006|            -4.93E-003|
|    47|             6.82E-005|            -4.92E-003|
|    48|             2.75E-004|            -4.92E-003|
-------------------------------------------------------
```

DESLOCAMENTOS NAS SEÇÕES DE INTERESSE (ROTAÇÃO)

SEÇÃO	ROTAÇÃO (rad)
1	4.14E-004
2	4.29E-004
3	1.01E-004
4	-4.65E-004
5	-9.96E-004
6	-1.21E-003
7	-1.16E-003
8	-1.06E-003
9	-4.78E-004
10	-1.02E-004
11	4.22E-005
12	7.16E-006
13	6.10E-005
14	1.25E-004
15	5.88E-005
16	-3.38E-004
17	-8.08E-004
18	-1.09E-003
19	-1.08E-003
20	-1.02E-003
21	-6.82E-004
22	-3.68E-004
23	-3.72E-005
24	3.46E-004
25	1.16E-003
26	1.21E-003
27	9.96E-004
28	4.65E-004
29	-1.01E-004
30	-4.29E-004
31	-4.14E-004
32	-3.46E-004
33	3.72E-005
34	3.68E-004
35	6.82E-004
36	1.02E-003
37	1.08E-003
38	1.09E-003
39	8.08E-004
40	3.38E-004
41	-5.88E-005
42	-1.25E-004
43	-6.10E-005
44	-7.16E-006
45	-4.22E-005
46	1.02E-004
47	4.78E-004
48	1.06E-003

```
#####################################################
#            SOLICITAÇÕES NORMAIS (ELU)             #
#                     VminHmax                      #
#####################################################
-----------------------------------------------------
 DESLOCAMENTOS NAS SEÇÕES DE INTERESSE NAS DIR. X E Y
-----------------------------------------------------
| SEÇÃO|         DIREÇÃO X (m)|         DIREÇÃO Y (m)|
-----------------------------------------------------
|     1|             3.38E-006|            -2.77E-003|
|     2|             1.65E-006|            -2.75E-003|
|     3|            -1.71E-006|            -2.71E-003|
|     4|            -5.08E-006|            -2.69E-003|
|     5|            -8.44E-006|            -2.72E-003|
|     6|            -1.18E-005|            -2.77E-003|
|     7|            -1.35E-005|            -2.79E-003|
|     8|             1.43E-006|            -2.80E-003|
|     9|             2.26E-007|            -2.80E-003|
|    10|            -1.40E-006|            -2.80E-003|
|    11|            -5.35E-007|            -2.81E-003|
|    12|             2.12E-006|            -2.81E-003|
|    13|            -1.56E-006|            -2.81E-003|
|    14|            -1.17E-007|            -2.83E-003|
|    15|             2.68E-006|            -2.86E-003|
|    16|             5.48E-006|            -2.88E-003|
|    17|             8.28E-006|            -2.85E-003|
|    18|             1.11E-005|            -2.82E-003|
|    19|             1.25E-005|            -2.79E-003|
|    20|             1.62E-008|            -2.79E-003|
|    21|             1.07E-005|            -2.79E-003|
|    22|             1.99E-005|            -2.78E-003|
|    23|             7.04E-006|            -2.78E-003|
|    24|            -7.23E-006|            -2.78E-003|
|    25|             1.35E-005|            -2.79E-003|
|    26|             1.18E-005|            -2.77E-003|
|    27|             8.44E-006|            -2.72E-003|
|    28|             5.08E-006|            -2.69E-003|
|    29|             1.71E-006|            -2.71E-003|
|    30|            -1.65E-006|            -2.75E-003|
|    31|            -3.38E-006|            -2.77E-003|
|    32|             7.23E-006|            -2.78E-003|
|    33|            -7.04E-006|            -2.78E-003|
|    34|            -1.99E-005|            -2.78E-003|
|    35|            -1.07E-005|            -2.79E-003|
|    36|            -1.61E-008|            -2.79E-003|
|    37|            -1.25E-005|            -2.79E-003|
|    38|            -1.11E-005|            -2.82E-003|
|    39|            -8.28E-006|            -2.85E-003|
|    40|            -5.48E-006|            -2.88E-003|
|    41|            -2.68E-006|            -2.86E-003|
|    42|             1.17E-007|            -2.83E-003|
|    43|             1.56E-006|            -2.81E-003|
|    44|            -2.12E-006|            -2.81E-003|
|    45|             5.36E-007|            -2.81E-003|
|    46|             1.40E-006|            -2.80E-003|
|    47|            -2.26E-007|            -2.80E-003|
|    48|            -1.43E-006|            -2.80E-003|
-----------------------------------------------------
```

DESLOCAMENTOS NAS SEÇÕES DE INTERESSE (ROTAÇÃO)

SEÇÃO	ROTAÇÃO (rad)
1	6.29E-005
2	1.12E-004
3	1.36E-004
4	-1.64E-005
5	-1.66E-004
6	-1.30E-004
7	-7.87E-005
8	-2.85E-005
9	1.05E-005
10	1.37E-006
11	-7.65E-006
12	-1.85E-006
13	3.14E-005
14	7.78E-005
15	1.17E-004
16	-6.85E-006
17	-1.36E-004
18	-1.10E-004
19	-6.73E-005
20	-1.96E-005
21	6.08E-005
22	-6.23E-006
23	-7.49E-005
24	1.02E-005
25	7.87E-005
26	1.30E-004
27	1.66E-004
28	1.64E-005
29	-1.36E-004
30	-1.12E-004
31	-6.29E-005
32	-1.02E-005
33	7.49E-005
34	6.23E-006
35	-6.08E-005
36	1.96E-005
37	6.73E-005
38	1.10E-004
39	1.36E-004
40	6.85E-006
41	-1.17E-004
42	-7.78E-005
43	-3.14E-005
44	1.85E-006
45	7.65E-006
46	-1.37E-006
47	-1.05E-005
48	2.85E-005

```
#####################################################
#            SOLICITAÇÕES NORMAIS (ELU)             #
#                     VmaxHmax                      #
#####################################################
-----------------------------------------------------
 DESLOCAMENTOS NAS SEÇÕES DE INTERESSE NAS DIR. X E Y
-----------------------------------------------------
| SEÇÃO|         DIREÇÃO X (m)|         DIREÇÃO Y (m)|
-----------------------------------------------------
|     1|            -2.77E-004|            -4.29E-003|
|     2|            -2.79E-004|            -4.19E-003|
|     3|            -2.81E-004|            -4.10E-003|
|     4|            -2.83E-004|            -4.12E-003|
|     5|            -2.85E-004|            -4.26E-003|
|     6|            -2.88E-004|            -4.47E-003|
|     7|            -2.89E-004|            -4.68E-003|
|     8|            -1.01E-004|            -4.68E-003|
|     9|             1.24E-006|            -4.69E-003|
|    10|             2.12E-005|            -4.70E-003|
|    11|             8.72E-006|            -4.70E-003|
|    12|             3.21E-006|            -4.71E-003|
|    13|            -4.99E-006|            -4.71E-003|
|    14|            -4.04E-006|            -4.74E-003|
|    15|            -2.18E-006|            -4.79E-003|
|    16|            -3.32E-007|            -4.79E-003|
|    17|             1.52E-006|            -4.69E-003|
|    18|             3.37E-006|            -4.51E-003|
|    19|             4.32E-006|            -4.32E-003|
|    20|            -1.77E-004|            -4.31E-003|
|    21|            -3.08E-004|            -4.31E-003|
|    22|            -3.79E-004|            -4.30E-003|
|    23|            -4.03E-004|            -4.30E-003|
|    24|            -3.67E-004|            -4.29E-003|
|    25|             2.89E-004|            -4.68E-003|
|    26|             2.88E-004|            -4.47E-003|
|    27|             2.85E-004|            -4.26E-003|
|    28|             2.83E-004|            -4.12E-003|
|    29|             2.81E-004|            -4.10E-003|
|    30|             2.79E-004|            -4.19E-003|
|    31|             2.77E-004|            -4.29E-003|
|    32|             3.67E-004|            -4.29E-003|
|    33|             4.03E-004|            -4.30E-003|
|    34|             3.79E-004|            -4.30E-003|
|    35|             3.08E-004|            -4.31E-003|
|    36|             1.77E-004|            -4.31E-003|
|    37|            -4.32E-006|            -4.32E-003|
|    38|            -3.37E-006|            -4.51E-003|
|    39|            -1.52E-006|            -4.69E-003|
|    40|             3.32E-007|            -4.79E-003|
|    41|             2.18E-006|            -4.79E-003|
|    42|             4.04E-006|            -4.74E-003|
|    43|             4.99E-006|            -4.71E-003|
|    44|            -3.21E-006|            -4.71E-003|
|    45|            -8.71E-006|            -4.70E-003|
|    46|            -2.12E-005|            -4.70E-003|
|    47|            -1.24E-006|            -4.69E-003|
|    48|             1.01E-004|            -4.68E-003|
-----------------------------------------------------
```

DESLOCAMENTOS NAS SEÇÕES DE INTERESSE (ROTAÇÃO)

SEÇÃO	ROTAÇÃO (rad)
1	3.55E-004
2	3.88E-004
3	1.69E-004
4	-2.86E-004
5	-7.01E-004
6	-7.91E-004
7	-7.26E-004
8	-6.19E-004
9	-1.82E-004
10	1.20E-005
11	5.29E-005
12	3.78E-006
13	6.08E-005
14	1.35E-004
15	1.45E-004
16	-1.65E-004
17	-5.38E-004
18	-7.17E-004
19	-6.87E-004
20	-6.24E-004
21	-3.50E-004
22	-1.74E-004
23	4.16E-006
24	2.86E-004
25	7.26E-004
26	7.91E-004
27	7.01E-004
28	2.86E-004
29	-1.69E-004
30	-3.88E-004
31	-3.55E-004
32	-2.86E-004
33	-4.16E-006
34	1.74E-004
35	3.50E-004
36	6.24E-004
37	6.87E-004
38	7.17E-004
39	5.38E-004
40	1.65E-004
41	-1.45E-004
42	-1.35E-004
43	-6.08E-005
44	-3.78E-006
45	-5.29E-005
46	-1.20E-005
47	1.82E-004
48	6.19E-004

```
#####################################################
#          SOLICITAÇÕES TANGENCIAIS (ELU)           #
#                     VmaxHmin                      #
#####################################################
-----------------------------------------------------
 DESLOCAMENTOS NAS SEÇÕES DE INTERESSE NAS DIR. X E Y
-----------------------------------------------------
| SEÇÃO|         DIREÇÃO X (m)|         DIREÇÃO Y (m)|
-----------------------------------------------------
|     1|            -5.77E-004|            -4.24E-003|
|     2|            -5.77E-004|            -4.10E-003|
|     3|            -5.78E-004|            -4.00E-003|
|     4|            -5.78E-004|            -4.04E-003|
|     5|            -5.79E-004|            -4.26E-003|
|     6|            -5.80E-004|            -4.62E-003|
|     7|            -5.80E-004|            -5.01E-003|
|     8|            -2.13E-004|            -5.01E-003|
|     9|            -3.52E-006|            -5.03E-003|
|    10|             1.42E-005|            -5.04E-003|
|    11|            -4.65E-005|            -5.05E-003|
|    12|            -6.52E-005|            -5.06E-003|
|    13|            -6.03E-005|            -5.07E-003|
|    14|            -5.99E-005|            -5.08E-003|
|    15|            -5.90E-005|            -5.10E-003|
|    16|            -5.81E-005|            -5.05E-003|
|    17|            -5.72E-005|            -4.86E-003|
|    18|            -5.64E-005|            -4.58E-003|
|    19|            -5.59E-005|            -4.26E-003|
|    20|            -3.58E-004|            -4.26E-003|
|    21|            -5.94E-004|            -4.25E-003|
|    22|            -7.30E-004|            -4.25E-003|
|    23|            -7.70E-004|            -4.24E-003|
|    24|            -7.07E-004|            -4.24E-003|
|    25|             5.80E-004|            -4.98E-003|
|    26|             5.80E-004|            -4.62E-003|
|    27|             5.79E-004|            -4.28E-003|
|    28|             5.78E-004|            -4.05E-003|
|    29|             5.77E-004|            -3.99E-003|
|    30|             5.77E-004|            -4.09E-003|
|    31|             5.76E-004|            -4.24E-003|
|    32|             7.12E-004|            -4.24E-003|
|    33|             7.64E-004|            -4.25E-003|
|    34|             7.00E-004|            -4.26E-003|
|    35|             5.39E-004|            -4.27E-003|
|    36|             2.77E-004|            -4.28E-003|
|    37|            -5.31E-005|            -4.28E-003|
|    38|            -5.27E-005|            -4.62E-003|
|    39|            -5.19E-005|            -4.92E-003|
|    40|            -5.11E-005|            -5.08E-003|
|    41|            -5.03E-005|            -5.10E-003|
|    42|            -4.95E-005|            -5.05E-003|
|    43|            -4.91E-005|            -5.01E-003|
|    44|            -7.06E-005|            -5.00E-003|
|    45|            -8.21E-005|            -5.00E-003|
|    46|            -7.53E-005|            -4.99E-003|
|    47|             1.32E-005|            -4.98E-003|
|    48|             2.43E-004|            -4.98E-003|
-----------------------------------------------------
```

DESLOCAMENTOS NAS SEÇÕES DE INTERESSE (ROTAÇÃO)

SEÇÃO	ROTAÇÃO (rad)
1	5.00E-004
2	5.13E-004
3	1.47E-004
4	-4.82E-004
5	-1.10E-003
6	-1.43E-003
7	-1.40E-003
8	-1.23E-003
9	-3.50E-004
10	1.52E-004
11	2.12E-004
12	-5.24E-005
13	3.15E-005
14	8.73E-005
15	-1.69E-005
16	-4.28E-004
17	-8.90E-004
18	-1.15E-003
19	-1.13E-003
20	-1.06E-003
21	-6.70E-004
22	-3.19E-004
23	3.57E-005
24	4.32E-004
25	1.27E-003
26	1.32E-003
27	1.09E-003
28	5.26E-004
29	-1.06E-004
30	-5.31E-004
31	-5.33E-004
32	-4.40E-004
33	4.02E-005
34	4.15E-004
35	7.60E-004
36	1.16E-003
37	1.23E-003
38	1.23E-003
39	8.46E-004
40	3.14E-004
41	-1.13E-004
42	-1.79E-004
43	-1.10E-004
44	-4.94E-005
45	-4.41E-005
46	1.35E-004
47	5.45E-004
48	1.16E-003

```
#####################################################
#          SOLICITAÇÕES TANGENCIAIS (ELU)           #
#                     VminHmax                      #
#####################################################
-----------------------------------------------------
 DESLOCAMENTOS NAS SEÇÕES DE INTERESSE NAS DIR. X E Y
-----------------------------------------------------
| SEÇÃO|         DIREÇÃO X (m)|         DIREÇÃO Y (m)|
-----------------------------------------------------
|     1|            -1.35E-006|            -2.78E-003|
|     2|            -3.08E-006|            -2.75E-003|
|     3|            -6.43E-006|            -2.71E-003|
|     4|            -9.79E-006|            -2.69E-003|
|     5|            -1.31E-005|            -2.72E-003|
|     6|            -1.65E-005|            -2.77E-003|
|     7|            -1.82E-005|            -2.81E-003|
|     8|             4.47E-007|            -2.81E-003|
|     9|            -6.74E-006|            -2.82E-003|
|    10|            -1.12E-005|            -2.83E-003|
|    11|            -8.92E-006|            -2.83E-003|
|    12|            -1.09E-007|            -2.84E-003|
|    13|             1.03E-006|            -2.84E-003|
|    14|             2.47E-006|            -2.86E-003|
|    15|             5.27E-006|            -2.89E-003|
|    16|             8.08E-006|            -2.90E-003|
|    17|             1.09E-005|            -2.87E-003|
|    18|             1.37E-005|            -2.82E-003|
|    19|             1.51E-005|            -2.79E-003|
|    20|            -2.92E-006|            -2.79E-003|
|    21|             3.58E-006|            -2.79E-003|
|    22|             1.09E-005|            -2.79E-003|
|    23|            -1.94E-006|            -2.78E-003|
|    24|            -1.45E-005|            -2.78E-003|
|    25|             1.82E-005|            -2.80E-003|
|    26|             1.65E-005|            -2.77E-003|
|    27|             1.31E-005|            -2.72E-003|
|    28|             9.78E-006|            -2.69E-003|
|    29|             6.41E-006|            -2.71E-003|
|    30|             3.05E-006|            -2.75E-003|
|    31|             1.32E-006|            -2.78E-003|
|    32|             9.73E-006|            -2.78E-003|
|    33|            -2.76E-005|            -2.79E-003|
|    34|            -5.53E-005|            -2.79E-003|
|    35|            -3.22E-005|            -2.80E-003|
|    36|             3.69E-007|            -2.81E-003|
|    37|            -9.51E-006|            -2.81E-003|
|    38|            -8.07E-006|            -2.84E-003|
|    39|            -5.27E-006|            -2.88E-003|
|    40|            -2.47E-006|            -2.90E-003|
|    41|             3.25E-007|            -2.88E-003|
|    42|             3.12E-006|            -2.84E-003|
|    43|             4.56E-006|            -2.82E-003|
|    44|            -4.58E-006|            -2.82E-003|
|    45|            -7.12E-006|            -2.82E-003|
|    46|            -8.08E-006|            -2.81E-003|
|    47|            -7.31E-006|            -2.81E-003|
|    48|            -2.62E-006|            -2.81E-003|
-----------------------------------------------------
```

DESLOCAMENTOS NAS SEÇÕES DE INTERESSE (ROTAÇÃO)

SEÇÃO	ROTAÇÃO (rad)
1	7.24E-005
2	1.22E-004
3	1.43E-004
4	-1.72E-005
5	-1.79E-004
6	-1.62E-004
7	-1.14E-004
8	-2.07E-005
9	2.73E-005
10	4.44E-006
11	-2.13E-005
12	-2.94E-005
13	2.87E-005
14	7.29E-005
15	1.01E-004
16	-2.96E-005
17	-1.60E-004
18	-1.32E-004
19	-8.80E-005
20	-3.90E-005
21	4.99E-005
22	-9.55E-006
23	-7.16E-005
24	1.91E-005
25	9.99E-005
26	1.51E-004
27	1.79E-004
28	2.23E-005
29	-1.39E-004
30	-1.25E-004
31	-7.77E-005
32	2.38E-005
33	1.69E-004
34	7.61E-006
35	-1.51E-004
36	-1.36E-005
37	7.82E-005
38	1.20E-004
39	1.36E-004
40	-9.54E-007
41	-1.31E-004
42	-9.65E-005
43	-5.06E-005
44	-1.91E-005
45	-5.89E-006
46	-7.33E-007
47	6.71E-006
48	5.04E-005

```
#######################################################
#          SOLICITAÇÕES TANGENCIAIS (ELU)             #
#                     VmaxHmax                        #
#######################################################
-------------------------------------------------------
 DESLOCAMENTOS NAS SEÇÕES DE INTERESSE NAS DIR. X E Y
-------------------------------------------------------
| SEÇÃO|         DIREÇÃO X (m)|         DIREÇÃO Y (m)|
-------------------------------------------------------
|     1|            -3.30E-004|            -4.28E-003|
|     2|            -3.31E-004|            -4.17E-003|
|     3|            -3.33E-004|            -4.08E-003|
|     4|            -3.35E-004|            -4.09E-003|
|     5|            -3.38E-004|            -4.25E-003|
|     6|            -3.40E-004|            -4.50E-003|
|     7|            -3.41E-004|            -4.76E-003|
|     8|            -1.07E-004|            -4.77E-003|
|     9|            -4.64E-006|            -4.78E-003|
|    10|            -9.77E-006|            -4.80E-003|
|    11|            -4.12E-005|            -4.81E-003|
|    12|            -4.19E-005|            -4.82E-003|
|    13|            -3.76E-005|            -4.82E-003|
|    14|            -3.66E-005|            -4.84E-003|
|    15|            -3.47E-005|            -4.88E-003|
|    16|            -3.28E-005|            -4.86E-003|
|    17|            -3.09E-005|            -4.73E-003|
|    18|            -2.90E-005|            -4.53E-003|
|    19|            -2.81E-005|            -4.31E-003|
|    20|            -2.30E-004|            -4.31E-003|
|    21|            -3.75E-004|            -4.30E-003|
|    22|            -4.51E-004|            -4.30E-003|
|    23|            -4.74E-004|            -4.29E-003|
|    24|            -4.30E-004|            -4.29E-003|
|    25|             3.41E-004|            -4.74E-003|
|    26|             3.40E-004|            -4.50E-003|
|    27|             3.37E-004|            -4.26E-003|
|    28|             3.35E-004|            -4.10E-003|
|    29|             3.33E-004|            -4.08E-003|
|    30|             3.31E-004|            -4.17E-003|
|    31|             3.29E-004|            -4.28E-003|
|    32|             4.31E-004|            -4.29E-003|
|    33|             4.57E-004|            -4.30E-003|
|    34|             4.13E-004|            -4.31E-003|
|    35|             3.29E-004|            -4.32E-003|
|    36|             1.81E-004|            -4.33E-003|
|    37|            -3.66E-005|            -4.33E-003|
|    38|            -3.56E-005|            -4.57E-003|
|    39|            -3.38E-005|            -4.77E-003|
|    40|            -3.20E-005|            -4.88E-003|
|    41|            -3.01E-005|            -4.87E-003|
|    42|            -2.83E-005|            -4.81E-003|
|    43|            -2.73E-005|            -4.77E-003|
|    44|            -4.85E-005|            -4.77E-003|
|    45|            -5.70E-005|            -4.76E-003|
|    46|            -5.36E-005|            -4.76E-003|
|    47|            -7.62E-006|            -4.75E-003|
|    48|             1.24E-004|            -4.75E-003|
-------------------------------------------------------
```

DESLOCAMENTOS NAS SEÇÕES DE INTERESSE (ROTAÇÃO)

SEÇÃO	ROTAÇÃO (rad)
1	3.93E-004
2	4.25E-004
3	1.84E-004
4	-3.14E-004
5	-7.95E-004
6	-9.75E-004
7	-9.27E-004
8	-7.47E-004
9	-1.04E-004
10	1.04E-004
11	8.76E-005
12	-5.59E-005
13	3.80E-005
14	1.04E-004
15	7.26E-005
16	-2.59E-004
17	-6.35E-004
18	-7.99E-004
19	-7.64E-004
20	-6.94E-004
21	-3.85E-004
22	-1.78E-004
23	2.28E-005
24	3.22E-004
25	8.35E-004
26	8.99E-004
27	7.92E-004
28	3.46E-004
29	-1.56E-004
30	-4.38E-004
31	-4.18E-004
32	-3.08E-004
33	6.88E-005
34	2.32E-004
35	3.90E-004
36	7.36E-004
37	8.34E-004
38	8.50E-004
39	5.96E-004
40	1.68E-004
41	-1.77E-004
42	-1.83E-004
43	-1.08E-004
44	-4.86E-005
45	-2.54E-005
46	6.97E-005
47	2.85E-004
48	7.26E-004

```
#####################################################
#             VERIFICAÇÃO DA FADIGA (ELS)           #
#                      VmaxHmin                     #
#####################################################
-----------------------------------------------------
 DESLOCAMENTOS NAS SEÇÕES DE INTERESSE NAS DIR. X E Y
-----------------------------------------------------
| SEÇÃO|         DIREÇÃO X (m)|         DIREÇÃO Y (m)|
-----------------------------------------------------
|     1|            -2.18E-004|            -3.07E-003|
|     2|            -2.19E-004|            -3.00E-003|
|     3|            -2.21E-004|            -2.93E-003|
|     4|            -2.22E-004|            -2.95E-003|
|     5|            -2.24E-004|            -3.05E-003|
|     6|            -2.25E-004|            -3.22E-003|
|     7|            -2.26E-004|            -3.37E-003|
|     8|            -8.12E-005|            -3.38E-003|
|     9|             6.51E-007|            -3.38E-003|
|    10|             1.73E-005|            -3.39E-003|
|    11|             7.12E-006|            -3.39E-003|
|    12|             2.23E-006|            -3.39E-003|
|    13|            -3.64E-006|            -3.40E-003|
|    14|            -3.04E-006|            -3.42E-003|
|    15|            -1.88E-006|            -3.45E-003|
|    16|            -7.15E-007|            -3.45E-003|
|    17|             4.48E-007|            -3.37E-003|
|    18|             1.61E-006|            -3.24E-003|
|    19|             2.21E-006|            -3.09E-003|
|    20|            -1.37E-004|            -3.09E-003|
|    21|            -2.39E-004|            -3.08E-003|
|    22|            -2.95E-004|            -3.08E-003|
|    23|            -3.13E-004|            -3.08E-003|
|    24|            -2.85E-004|            -3.07E-003|
|    25|             2.26E-004|            -3.37E-003|
|    26|             2.25E-004|            -3.22E-003|
|    27|             2.24E-004|            -3.05E-003|
|    28|             2.22E-004|            -2.95E-003|
|    29|             2.21E-004|            -2.93E-003|
|    30|             2.19E-004|            -3.00E-003|
|    31|             2.18E-004|            -3.07E-003|
|    32|             2.85E-004|            -3.07E-003|
|    33|             3.13E-004|            -3.08E-003|
|    34|             2.95E-004|            -3.08E-003|
|    35|             2.39E-004|            -3.08E-003|
|    36|             1.37E-004|            -3.09E-003|
|    37|            -2.21E-006|            -3.09E-003|
|    38|            -1.61E-006|            -3.24E-003|
|    39|            -4.48E-007|            -3.37E-003|
|    40|             7.16E-007|            -3.45E-003|
|    41|             1.88E-006|            -3.45E-003|
|    42|             3.04E-006|            -3.42E-003|
|    43|             3.64E-006|            -3.40E-003|
|    44|            -2.23E-006|            -3.39E-003|
|    45|            -7.12E-006|            -3.39E-003|
|    46|            -1.73E-005|            -3.39E-003|
|    47|            -6.51E-007|            -3.38E-003|
|    48|             8.12E-005|            -3.38E-003|
-----------------------------------------------------
```

DESLOCAMENTOS NAS SEÇÕES DE INTERESSE (ROTAÇÃO)

SEÇÃO	ROTAÇÃO (rad)
1	2.64E-004
2	2.85E-004
3	1.17E-004
4	-2.20E-004
5	-5.27E-004
6	-6.02E-004
7	-5.58E-004
8	-4.81E-004
9	-1.50E-004
10	8.97E-006
11	4.40E-005
12	3.08E-006
13	4.32E-005
14	9.52E-005
15	9.64E-005
16	-1.31E-004
17	-4.04E-004
18	-5.43E-004
19	-5.24E-004
20	-4.79E-004
21	-2.77E-004
22	-1.36E-004
23	5.71E-006
24	2.15E-004
25	5.58E-004
26	6.02E-004
27	5.27E-004
28	2.20E-004
29	-1.17E-004
30	-2.85E-004
31	-2.64E-004
32	-2.15E-004
33	-5.71E-006
34	1.36E-004
35	2.77E-004
36	4.79E-004
37	5.24E-004
38	5.43E-004
39	4.04E-004
40	1.31E-004
41	-9.64E-005
42	-9.52E-005
43	-4.32E-005
44	-3.08E-006
45	-4.40E-005
46	-8.97E-006
47	1.50E-004
48	4.81E-004

```
#####################################################
#             VERIFICAÇÃO DA FADIGA (ELS)           #
#                      VminHmax                     #
#####################################################
-----------------------------------------------------
 DESLOCAMENTOS NAS SEÇÕES DE INTERESSE NAS DIR. X E Y
-----------------------------------------------------
| SEÇÃO|         DIREÇÃO X (m)|         DIREÇÃO Y (m)|
-----------------------------------------------------
|     1|            -4.33E-005|            -2.78E-003|
|     2|            -4.45E-005|            -2.73E-003|
|     3|            -4.69E-005|            -2.68E-003|
|     4|            -4.94E-005|            -2.67E-003|
|     5|            -5.18E-005|            -2.72E-003|
|     6|            -5.42E-005|            -2.80E-003|
|     7|            -5.55E-005|            -2.86E-003|
|     8|            -9.12E-006|            -2.86E-003|
|     9|             1.63E-006|            -2.87E-003|
|    10|             2.59E-007|            -2.87E-003|
|    11|             9.05E-008|            -2.87E-003|
|    12|             2.24E-006|            -2.88E-003|
|    13|            -2.46E-006|            -2.88E-003|
|    14|            -1.45E-006|            -2.90E-003|
|    15|             5.30E-007|            -2.93E-003|
|    16|             2.51E-006|            -2.95E-003|
|    17|             4.48E-006|            -2.92E-003|
|    18|             6.46E-006|            -2.85E-003|
|    19|             7.47E-006|            -2.79E-003|
|    20|            -4.34E-005|            -2.79E-003|
|    21|            -6.84E-005|            -2.79E-003|
|    22|            -7.80E-005|            -2.79E-003|
|    23|            -8.65E-005|            -2.78E-003|
|    24|            -7.90E-005|            -2.78E-003|
|    25|             5.55E-005|            -2.86E-003|
|    26|             5.42E-005|            -2.80E-003|
|    27|             5.18E-005|            -2.72E-003|
|    28|             4.94E-005|            -2.67E-003|
|    29|             4.69E-005|            -2.68E-003|
|    30|             4.45E-005|            -2.73E-003|
|    31|             4.33E-005|            -2.78E-003|
|    32|             7.90E-005|            -2.78E-003|
|    33|             8.65E-005|            -2.78E-003|
|    34|             7.80E-005|            -2.79E-003|
|    35|             6.84E-005|            -2.79E-003|
|    36|             4.34E-005|            -2.79E-003|
|    37|            -7.47E-006|            -2.79E-003|
|    38|            -6.46E-006|            -2.85E-003|
|    39|            -4.48E-006|            -2.92E-003|
|    40|            -2.51E-006|            -2.95E-003|
|    41|            -5.30E-007|            -2.93E-003|
|    42|             1.45E-006|            -2.90E-003|
|    43|             2.46E-006|            -2.88E-003|
|    44|            -2.24E-006|            -2.88E-003|
|    45|            -9.04E-008|            -2.87E-003|
|    46|            -2.58E-007|            -2.87E-003|
|    47|            -1.63E-006|            -2.87E-003|
|    48|             9.12E-006|            -2.86E-003|
-----------------------------------------------------
```

DESLOCAMENTOS NAS SEÇÕES DE INTERESSE (ROTAÇÃO)

SEÇÃO	ROTAÇÃO (rad)
1	1.51E-004
2	1.85E-004
3	1.33E-004
4	-7.68E-005
5	-2.64E-004
6	-2.48E-004
7	-1.97E-004
8	-1.32E-004
9	4.74E-006
10	4.01E-006
11	-4.00E-006
12	4.02E-008
13	3.67E-005
14	8.64E-005
15	1.27E-004
16	-1.85E-005
17	-1.92E-004
18	-2.34E-004
19	-2.04E-004
20	-1.62E-004
21	-4.55E-005
22	-3.30E-005
23	-2.04E-005
24	1.04E-004
25	1.97E-004
26	2.48E-004
27	2.64E-004
28	7.68E-005
29	-1.33E-004
30	-1.85E-004
31	-1.51E-004
32	-1.04E-004
33	2.04E-005
34	3.30E-005
35	4.55E-005
36	1.62E-004
37	2.04E-004
38	2.34E-004
39	1.92E-004
40	1.85E-005
41	-1.27E-004
42	-8.64E-005
43	-3.67E-005
44	-4.01E-008
45	4.00E-006
46	-4.01E-006
47	-4.74E-006
48	1.32E-004

```
#####################################################
#             VERIFICAÇÃO DA FADIGA (ELS)           #
#                      VmaxHmax                     #
#####################################################
-----------------------------------------------------
 DESLOCAMENTOS NAS SEÇÕES DE INTERESSE NAS DIR. X E Y
-----------------------------------------------------
| SEÇÃO|         DIREÇÃO X (m)|         DIREÇÃO Y (m)|
-----------------------------------------------------
|     1|            -1.96E-004|            -3.08E-003|
|     2|            -1.97E-004|            -3.00E-003|
|     3|            -1.99E-004|            -2.94E-003|
|     4|            -2.00E-004|            -2.95E-003|
|     5|            -2.02E-004|            -3.05E-003|
|     6|            -2.04E-004|            -3.20E-003|
|     7|            -2.05E-004|            -3.35E-003|
|     8|            -7.16E-005|            -3.35E-003|
|     9|             9.08E-007|            -3.36E-003|
|    10|             1.49E-005|            -3.36E-003|
|    11|             6.15E-006|            -3.37E-003|
|    12|             2.27E-006|            -3.37E-003|
|    13|            -3.53E-006|            -3.37E-003|
|    14|            -2.86E-006|            -3.39E-003|
|    15|            -1.55E-006|            -3.43E-003|
|    16|            -2.41E-007|            -3.43E-003|
|    17|             1.07E-006|            -3.36E-003|
|    18|             2.38E-006|            -3.23E-003|
|    19|             3.05E-006|            -3.09E-003|
|    20|            -1.26E-004|            -3.09E-003|
|    21|            -2.18E-004|            -3.09E-003|
|    22|            -2.69E-004|            -3.09E-003|
|    23|            -2.86E-004|            -3.08E-003|
|    24|            -2.60E-004|            -3.08E-003|
|    25|             2.05E-004|            -3.35E-003|
|    26|             2.04E-004|            -3.20E-003|
|    27|             2.02E-004|            -3.05E-003|
|    28|             2.00E-004|            -2.95E-003|
|    29|             1.99E-004|            -2.94E-003|
|    30|             1.97E-004|            -3.00E-003|
|    31|             1.96E-004|            -3.08E-003|
|    32|             2.60E-004|            -3.08E-003|
|    33|             2.86E-004|            -3.08E-003|
|    34|             2.69E-004|            -3.09E-003|
|    35|             2.18E-004|            -3.09E-003|
|    36|             1.26E-004|            -3.09E-003|
|    37|            -3.05E-006|            -3.09E-003|
|    38|            -2.38E-006|            -3.23E-003|
|    39|            -1.07E-006|            -3.36E-003|
|    40|             2.41E-007|            -3.43E-003|
|    41|             1.55E-006|            -3.43E-003|
|    42|             2.86E-006|            -3.39E-003|
|    43|             3.53E-006|            -3.37E-003|
|    44|            -2.27E-006|            -3.37E-003|
|    45|            -6.15E-006|            -3.37E-003|
|    46|            -1.49E-005|            -3.36E-003|
|    47|            -9.08E-007|            -3.36E-003|
|    48|             7.16E-005|            -3.35E-003|
-----------------------------------------------------
```

DESLOCAMENTOS NAS SEÇÕES DE INTERESSE (ROTAÇÃO)

SEÇÃO	ROTAÇÃO (rad)
1	2.53E-004
2	2.77E-004
3	1.21E-004
4	-2.03E-004
5	-4.98E-004
6	-5.62E-004
7	-5.15E-004
8	-4.39E-004
9	-1.28E-004
10	8.51E-006
11	3.73E-005
12	2.67E-006
13	4.30E-005
14	9.57E-005
15	1.03E-004
16	-1.16E-004
17	-3.80E-004
18	-5.08E-004
19	-4.87E-004
20	-4.42E-004
21	-2.49E-004
22	-1.24E-004
23	2.51E-006
24	2.04E-004
25	5.15E-004
26	5.62E-004
27	4.98E-004
28	2.03E-004
29	-1.21E-004
30	-2.77E-004
31	-2.53E-004
32	-2.04E-004
33	-2.51E-006
34	1.24E-004
35	2.49E-004
36	4.42E-004
37	4.87E-004
38	5.08E-004
39	3.80E-004
40	1.16E-004
41	-1.03E-004
42	-9.57E-005
43	-4.30E-005
44	-2.67E-006
45	-3.73E-005
46	-8.51E-006
47	1.28E-004
48	4.39E-004

```
#####################################################
#             VERIFICAÇÃO DA FADIGA (ELS)           #
#                      VminHmin                     #
#####################################################
-----------------------------------------------------
 DESLOCAMENTOS NAS SEÇÕES DE INTERESSE NAS DIR. X E Y
-----------------------------------------------------
| SEÇÃO|         DIREÇÃO X (m)|         DIREÇÃO Y (m)|
-----------------------------------------------------
|     1|            -3.39E-004|            -3.08E-003|
|     2|            -3.39E-004|            -2.90E-003|
|     3|            -3.41E-004|            -2.73E-003|
|     4|            -3.42E-004|            -2.62E-003|
|     5|            -3.44E-004|            -2.61E-003|
|     6|            -3.45E-004|            -2.67E-003|
|     7|            -3.46E-004|            -2.73E-003|
|     8|            -2.91E-004|            -2.74E-003|
|     9|            -2.79E-004|            -2.74E-003|
|    10|            -3.20E-004|            -2.74E-003|
|    11|            -4.05E-004|            -2.75E-003|
|    12|            -5.44E-004|            -2.75E-003|
|    13|            -7.15E-004|            -2.75E-003|
|    14|            -7.15E-004|            -2.93E-003|
|    15|            -7.13E-004|            -3.09E-003|
|    16|            -7.12E-004|            -3.19E-003|
|    17|            -7.11E-004|            -3.20E-003|
|    18|            -7.10E-004|            -3.15E-003|
|    19|            -7.09E-004|            -3.10E-003|
|    20|            -7.59E-004|            -3.09E-003|
|    21|            -7.68E-004|            -3.09E-003|
|    22|            -7.26E-004|            -3.09E-003|
|    23|            -6.43E-004|            -3.08E-003|
|    24|            -5.11E-004|            -3.08E-003|
|    25|             3.46E-004|            -6.04E-004|
|    26|             3.46E-004|            -4.13E-004|
|    27|             3.46E-004|            -2.25E-004|
|    28|             3.46E-004|            -4.45E-005|
|    29|             3.46E-004|             1.30E-004|
|    30|             3.46E-004|             3.02E-004|
|    31|             3.46E-004|             4.72E-004|
|    32|             1.75E-004|             4.72E-004|
|    33|             3.08E-006|             4.72E-004|
|    34|            -1.72E-004|             4.72E-004|
|    35|            -3.49E-004|             4.72E-004|
|    36|            -5.31E-004|             4.72E-004|
|    37|            -7.14E-004|             4.72E-004|
|    38|            -7.14E-004|             2.88E-004|
|    39|            -7.14E-004|             1.03E-004|
|    40|            -7.14E-004|            -8.03E-005|
|    41|            -7.14E-004|            -2.61E-004|
|    42|            -7.14E-004|            -4.35E-004|
|    43|            -7.14E-004|            -6.05E-004|
|    44|            -5.46E-004|            -6.05E-004|
|    45|            -3.82E-004|            -6.05E-004|
|    46|            -2.10E-004|            -6.05E-004|
|    47|            -3.10E-005|            -6.04E-004|
|    48|             1.55E-004|            -6.04E-004|
-----------------------------------------------------
```

DESLOCAMENTOS NAS SEÇÕES DE INTERESSE (ROTAÇÃO)

SEÇÃO	ROTAÇÃO (rad)
1	6.49E-004
2	6.72E-004
3	5.21E-004
4	2.00E-004
5	-1.14E-004
6	-2.45E-004
7	-2.19E-004
8	-1.68E-004
9	6.29E-005
10	2.29E-004
11	3.98E-004
12	6.05E-004
13	6.39E-004
14	6.55E-004
15	5.00E-004
16	1.96E-004
17	-9.73E-005
18	-2.22E-004
19	-1.99E-004
20	-1.51E-004
21	6.97E-005
22	2.26E-004
23	3.80E-004
24	5.99E-004
25	6.94E-004
26	6.93E-004
27	6.70E-004
28	6.45E-004
29	6.28E-004
30	6.20E-004
31	6.20E-004
32	6.22E-004
33	6.30E-004
34	6.41E-004
35	6.53E-004
36	6.66E-004
37	6.68E-004
38	6.70E-004
39	6.71E-004
40	6.64E-004
41	6.47E-004
42	6.20E-004
43	6.15E-004
44	6.04E-004
45	6.09E-004
46	6.38E-004
47	6.65E-004
48	6.90E-004

```
#####################################################
#           VERIFICAÇÃO DA FISSURAÇÃO (ELS)         #
#                      VmaxHmin                     #
#####################################################
-----------------------------------------------------
 DESLOCAMENTOS NAS SEÇÕES DE INTERESSE NAS DIR. X E Y
-----------------------------------------------------
| SEÇÃO|         DIREÇÃO X (m)|         DIREÇÃO Y (m)|
-----------------------------------------------------
|     1|            -1.99E-004|            -2.95E-003|
|     2|            -2.00E-004|            -2.88E-003|
|     3|            -2.01E-004|            -2.82E-003|
|     4|            -2.03E-004|            -2.83E-003|
|     5|            -2.04E-004|            -2.93E-003|
|     6|            -2.06E-004|            -3.08E-003|
|     7|            -2.07E-004|            -3.23E-003|
|     8|            -7.34E-005|            -3.23E-003|
|     9|             7.41E-007|            -3.24E-003|
|    10|             1.55E-005|            -3.24E-003|
|    11|             6.38E-006|            -3.25E-003|
|    12|             2.14E-006|            -3.25E-003|
|    13|            -3.43E-006|            -3.25E-003|
|    14|            -2.84E-006|            -3.27E-003|
|    15|            -1.68E-006|            -3.30E-003|
|    16|            -5.14E-007|            -3.30E-003|
|    17|             6.48E-007|            -3.23E-003|
|    18|             1.81E-006|            -3.11E-003|
|    19|             2.41E-006|            -2.97E-003|
|    20|            -1.26E-004|            -2.97E-003|
|    21|            -2.19E-004|            -2.96E-003|
|    22|            -2.71E-004|            -2.96E-003|
|    23|            -2.88E-004|            -2.96E-003|
|    24|            -2.62E-004|            -2.95E-003|
|    25|             2.07E-004|            -3.23E-003|
|    26|             2.06E-004|            -3.08E-003|
|    27|             2.04E-004|            -2.93E-003|
|    28|             2.03E-004|            -2.83E-003|
|    29|             2.01E-004|            -2.82E-003|
|    30|             2.00E-004|            -2.88E-003|
|    31|             1.99E-004|            -2.95E-003|
|    32|             2.62E-004|            -2.95E-003|
|    33|             2.88E-004|            -2.96E-003|
|    34|             2.71E-004|            -2.96E-003|
|    35|             2.19E-004|            -2.96E-003|
|    36|             1.26E-004|            -2.97E-003|
|    37|            -2.41E-006|            -2.97E-003|
|    38|            -1.81E-006|            -3.11E-003|
|    39|            -6.48E-007|            -3.23E-003|
|    40|             5.14E-007|            -3.30E-003|
|    41|             1.68E-006|            -3.30E-003|
|    42|             2.84E-006|            -3.27E-003|
|    43|             3.43E-006|            -3.25E-003|
|    44|            -2.14E-006|            -3.25E-003|
|    45|            -6.38E-006|            -3.25E-003|
|    46|            -1.55E-005|            -3.24E-003|
|    47|            -7.41E-007|            -3.24E-003|
|    48|             7.34E-005|            -3.23E-003|
-----------------------------------------------------
```

DESLOCAMENTOS NAS SEÇÕES DE INTERESSE (ROTAÇÃO)

SEÇÃO	ROTAÇÃO (rad)
1	2.48E-004
2	2.70E-004
3	1.14E-004
4	-2.03E-004
5	-4.92E-004
6	-5.59E-004
7	-5.15E-004
8	-4.41E-004
9	-1.34E-004
10	8.38E-006
11	3.92E-005
12	2.78E-006
13	4.11E-005
14	9.10E-005
15	9.48E-005
16	-1.18E-004
17	-3.76E-004
18	-5.04E-004
19	-4.85E-004
20	-4.42E-004
21	-2.53E-004
22	-1.25E-004
23	4.20E-006
24	2.02E-004
25	5.15E-004
26	5.59E-004
27	4.92E-004
28	2.03E-004
29	-1.14E-004
30	-2.70E-004
31	-2.48E-004
32	-2.02E-004
33	-4.20E-006
34	1.25E-004
35	2.53E-004
36	4.42E-004
37	4.85E-004
38	5.04E-004
39	3.76E-004
40	1.18E-004
41	-9.48E-005
42	-9.10E-005
43	-4.11E-005
44	-2.78E-006
45	-3.92E-005
46	-8.38E-006
47	1.34E-004
48	4.41E-004

```
#######################################################
#           VERIFICAÇÃO DA FISSURAÇÃO (ELS)           #
#                      VminHmax                       #
#######################################################
-------------------------------------------------------
 DESLOCAMENTOS NAS SEÇÕES DE INTERESSE NAS DIR. X E Y
-------------------------------------------------------
| SEÇÃO|         DIREÇÃO X (m)|         DIREÇÃO Y (m)|
-------------------------------------------------------
|     1|            -4.91E-005|            -2.78E-003|
|     2|            -5.03E-005|            -2.73E-003|
|     3|            -5.27E-005|            -2.68E-003|
|     4|            -5.50E-005|            -2.67E-003|
|     5|            -5.74E-005|            -2.72E-003|
|     6|            -5.97E-005|            -2.80E-003|
|     7|            -6.09E-005|            -2.87E-003|
|     8|            -1.08E-005|            -2.87E-003|
|     9|             1.81E-006|            -2.87E-003|
|    10|             5.64E-007|            -2.88E-003|
|    11|             2.05E-007|            -2.88E-003|
|    12|             2.24E-006|            -2.88E-003|
|    13|            -2.54E-006|            -2.89E-003|
|    14|            -1.57E-006|            -2.90E-003|
|    15|             3.26E-007|            -2.94E-003|
|    16|             2.22E-006|            -2.96E-003|
|    17|             4.11E-006|            -2.92E-003|
|    18|             6.01E-006|            -2.86E-003|
|    19|             6.98E-006|            -2.79E-003|
|    20|            -4.80E-005|            -2.79E-003|
|    21|            -7.66E-005|            -2.79E-003|
|    22|            -8.81E-005|            -2.79E-003|
|    23|            -9.64E-005|            -2.78E-003|
|    24|            -8.70E-005|            -2.78E-003|
|    25|             6.09E-005|            -2.87E-003|
|    26|             5.97E-005|            -2.80E-003|
|    27|             5.74E-005|            -2.72E-003|
|    28|             5.50E-005|            -2.67E-003|
|    29|             5.27E-005|            -2.68E-003|
|    30|             5.03E-005|            -2.73E-003|
|    31|             4.91E-005|            -2.78E-003|
|    32|             8.70E-005|            -2.78E-003|
|    33|             9.64E-005|            -2.78E-003|
|    34|             8.81E-005|            -2.79E-003|
|    35|             7.66E-005|            -2.79E-003|
|    36|             4.80E-005|            -2.79E-003|
|    37|            -6.98E-006|            -2.79E-003|
|    38|            -6.01E-006|            -2.86E-003|
|    39|            -4.11E-006|            -2.92E-003|
|    40|            -2.22E-006|            -2.96E-003|
|    41|            -3.26E-007|            -2.94E-003|
|    42|             1.57E-006|            -2.90E-003|
|    43|             2.54E-006|            -2.89E-003|
|    44|            -2.24E-006|            -2.88E-003|
|    45|            -2.05E-007|            -2.88E-003|
|    46|            -5.64E-007|            -2.88E-003|
|    47|            -1.81E-006|            -2.87E-003|
|    48|             1.08E-005|            -2.87E-003|
-------------------------------------------------------
```

DESLOCAMENTOS NAS SEÇÕES DE INTERESSE (ROTAÇÃO)

SEÇÃO	ROTAÇÃO (rad)
1	1.58E-004
2	1.92E-004
3	1.32E-004
4	-8.33E-005
5	-2.75E-004
6	-2.62E-004
7	-2.11E-004
8	-1.46E-004
9	3.22E-006
10	4.39E-006
11	-3.24E-006
12	2.25E-007
13	3.72E-005
14	8.69E-005
15	1.27E-004
16	-2.13E-005
17	-1.99E-004
18	-2.47E-004
19	-2.18E-004
20	-1.76E-004
21	-5.63E-005
22	-3.60E-005
23	-1.57E-005
24	1.12E-004
25	2.11E-004
26	2.62E-004
27	2.75E-004
28	8.33E-005
29	-1.32E-004
30	-1.92E-004
31	-1.58E-004
32	-1.12E-004
33	1.57E-005
34	3.60E-005
35	5.63E-005
36	1.76E-004
37	2.18E-004
38	2.47E-004
39	1.99E-004
40	2.13E-005
41	-1.27E-004
42	-8.69E-005
43	-3.72E-005
44	-2.24E-007
45	3.24E-006
46	-4.39E-006
47	-3.22E-006
48	1.46E-004

```
#####################################################
#           VERIFICAÇÃO DA FISSURAÇÃO (ELS)         #
#                      VmaxHmax                     #
#####################################################
-----------------------------------------------------
 DESLOCAMENTOS NAS SEÇÕES DE INTERESSE NAS DIR. X E Y
-----------------------------------------------------
| SEÇÃO|         DIREÇÃO X (m)|         DIREÇÃO Y (m)|
-----------------------------------------------------
|     1|            -1.86E-004|            -2.96E-003|
|     2|            -1.86E-004|            -2.89E-003|
|     3|            -1.88E-004|            -2.83E-003|
|     4|            -1.89E-004|            -2.84E-003|
|     5|            -1.91E-004|            -2.93E-003|
|     6|            -1.93E-004|            -3.08E-003|
|     7|            -1.93E-004|            -3.22E-003|
|     8|            -6.75E-005|            -3.22E-003|
|     9|             9.02E-007|            -3.22E-003|
|    10|             1.40E-005|            -3.23E-003|
|    11|             5.77E-006|            -3.23E-003|
|    12|             2.17E-006|            -3.23E-003|
|    13|            -3.37E-006|            -3.24E-003|
|    14|            -2.72E-006|            -3.25E-003|
|    15|            -1.47E-006|            -3.29E-003|
|    16|            -2.17E-007|            -3.29E-003|
|    17|             1.04E-006|            -3.22E-003|
|    18|             2.29E-006|            -3.10E-003|
|    19|             2.93E-006|            -2.97E-003|
|    20|            -1.19E-004|            -2.97E-003|
|    21|            -2.07E-004|            -2.97E-003|
|    22|            -2.54E-004|            -2.96E-003|
|    23|            -2.71E-004|            -2.96E-003|
|    24|            -2.46E-004|            -2.96E-003|
|    25|             1.93E-004|            -3.22E-003|
|    26|             1.93E-004|            -3.08E-003|
|    27|             1.91E-004|            -2.93E-003|
|    28|             1.89E-004|            -2.84E-003|
|    29|             1.88E-004|            -2.83E-003|
|    30|             1.86E-004|            -2.89E-003|
|    31|             1.86E-004|            -2.96E-003|
|    32|             2.46E-004|            -2.96E-003|
|    33|             2.71E-004|            -2.96E-003|
|    34|             2.54E-004|            -2.96E-003|
|    35|             2.07E-004|            -2.97E-003|
|    36|             1.19E-004|            -2.97E-003|
|    37|            -2.93E-006|            -2.97E-003|
|    38|            -2.29E-006|            -3.10E-003|
|    39|            -1.04E-006|            -3.22E-003|
|    40|             2.17E-007|            -3.29E-003|
|    41|             1.47E-006|            -3.29E-003|
|    42|             2.72E-006|            -3.25E-003|
|    43|             3.37E-006|            -3.24E-003|
|    44|            -2.17E-006|            -3.23E-003|
|    45|            -5.77E-006|            -3.23E-003|
|    46|            -1.40E-005|            -3.23E-003|
|    47|            -9.02E-007|            -3.22E-003|
|    48|             6.75E-005|            -3.22E-003|
-----------------------------------------------------
```

DESLOCAMENTOS NAS SEÇÕES DE INTERESSE (ROTAÇÃO)

SEÇÃO	ROTAÇÃO (rad)
1	2.42E-004
2	2.64E-004
3	1.17E-004
4	-1.92E-004
5	-4.74E-004
6	-5.33E-004
7	-4.89E-004
8	-4.15E-004
9	-1.20E-004
10	8.09E-006
11	3.50E-005
12	2.53E-006
13	4.11E-005
14	9.14E-005
15	9.89E-005
16	-1.09E-004
17	-3.61E-004
18	-4.82E-004
19	-4.61E-004
20	-4.18E-004
21	-2.35E-004
22	-1.17E-004
23	2.19E-006
24	1.95E-004
25	4.89E-004
26	5.33E-004
27	4.74E-004
28	1.92E-004
29	-1.17E-004
30	-2.64E-004
31	-2.42E-004
32	-1.95E-004
33	-2.19E-006
34	1.17E-004
35	2.35E-004
36	4.18E-004
37	4.61E-004
38	4.82E-004
39	3.61E-004
40	1.09E-004
41	-9.89E-005
42	-9.14E-005
43	-4.11E-005
44	-2.53E-006
45	-3.50E-005
46	-8.09E-006
47	1.20E-004
48	4.15E-004

ESFORÇO NORMAL

NOMENCLATURA DAS SEÇÕES PARA VERSÃO COMPLETA DO RELATÓRIO

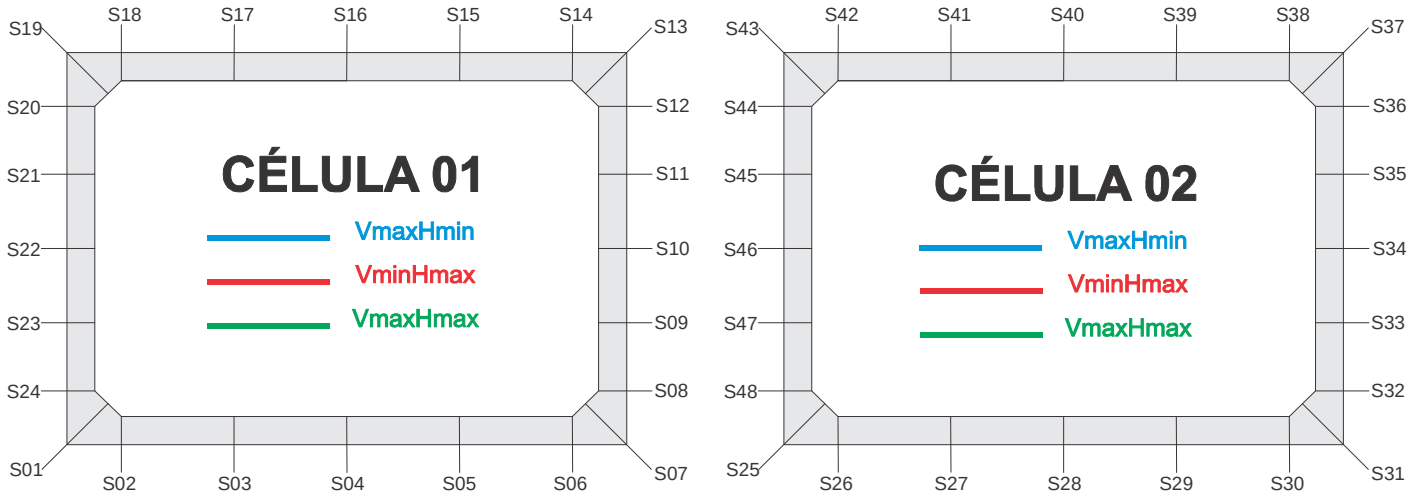

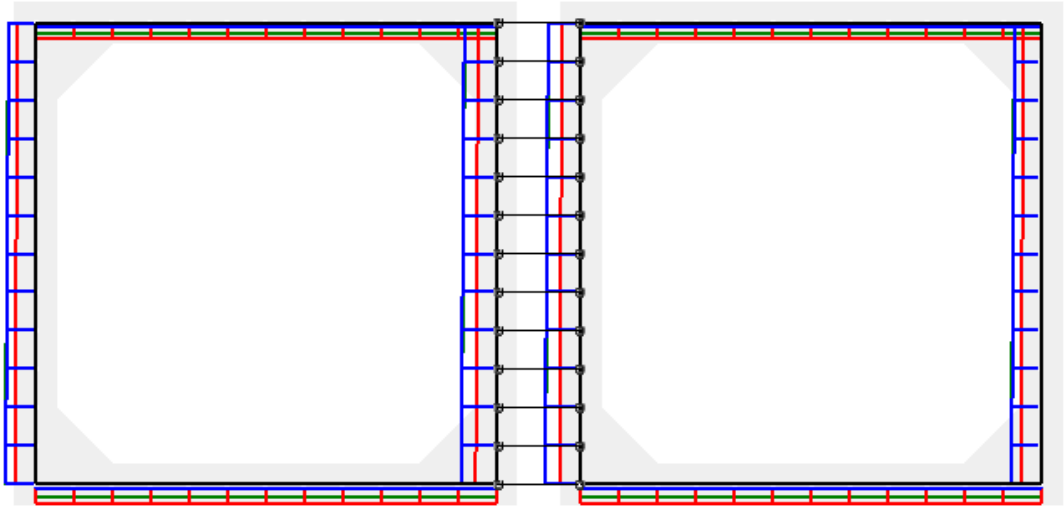

```
#######################################################
#            SOLICITAÇÕES NORMAIS (ELU)               #
#                      VmaxHmin                       #
#######################################################
-------------------------------------------------------
           ESFORÇO NORMAL NAS SEÇÕES DE INTERESSE
-------------------------------------------------------
|  SEÇÃO|          ESQUERDA (kN)|          DIREITA (kN)|
-------------------------------------------------------
|      1|                 -76.53|                -11.43|
|      2|                 -11.43|                -11.43|
|      3|                 -11.43|                -11.43|
|      4|                 -11.43|                -11.43|
|      5|                 -11.43|                -11.43|
|      6|                 -11.43|                -11.43|
|      7|                 -11.43|                -90.75|
|      8|                 -89.09|                -89.09|
|      9|                 -87.74|                -87.74|
|     10|                 -86.40|                -86.40|
|     11|                 -85.06|                -85.06|
|     12|                 -83.72|                -83.72|
|     13|                 -82.06|                -11.34|
|     14|                 -11.34|                -11.34|
|     15|                 -11.34|                -11.34|
|     16|                 -11.34|                -11.34|
|     17|                 -11.34|                -11.34|
|     18|                 -11.34|                -11.34|
|     19|                 -11.34|                -67.83|
|     20|                 -69.50|                -69.50|
|     21|                 -70.84|                -70.84|
|     22|                 -72.18|                -72.18|
|     23|                 -73.52|                -73.52|
|     24|                 -74.86|                -74.86|
|     25|                 -76.53|                -11.43|
|     26|                 -11.43|                -11.43|
|     27|                 -11.43|                -11.43|
|     28|                 -11.43|                -11.43|
|     29|                 -11.43|                -11.43|
|     30|                 -11.43|                -11.43|
|     31|                 -11.43|                -76.53|
|     32|                 -74.86|                -74.86|
|     33|                 -73.52|                -73.52|
|     34|                 -72.18|                -72.18|
|     35|                 -70.84|                -70.84|
|     36|                 -69.50|                -69.50|
|     37|                 -67.83|                -11.34|
|     38|                 -11.34|                -11.34|
|     39|                 -11.34|                -11.34|
|     40|                 -11.34|                -11.34|
|     41|                 -11.34|                -11.34|
|     42|                 -11.34|                -11.34|
|     43|                 -11.34|                -82.06|
|     44|                 -83.72|                -83.72|
|     45|                 -85.06|                -85.06|
|     46|                 -86.40|                -86.40|
|     47|                 -87.74|                -87.74|
|     48|                 -89.09|                -89.09|
-------------------------------------------------------
```

```
#######################################################
#            SOLICITAÇÕES NORMAIS (ELU)               #
#                     VminHmax                        #
#######################################################
-------------------------------------------------------
           ESFORÇO NORMAL NAS SEÇÕES DE INTERESSE
-------------------------------------------------------
|  SEÇÃO|          ESQUERDA (kN)|          DIREITA (kN)|
-------------------------------------------------------
|      1|                 -52.64|                -47.83|
|      2|                 -47.83|                -47.83|
|      3|                 -47.83|                -47.83|
|      4|                 -47.83|                -47.83|
|      5|                 -47.83|                -47.83|
|      6|                 -47.83|                -47.83|
|      7|                 -47.83|                -53.55|
|      8|                 -52.27|                -52.27|
|      9|                 -51.24|                -51.24|
|     10|                 -50.21|                -50.21|
|     11|                 -49.18|                -49.18|
|     12|                 -48.15|                -48.15|
|     13|                 -46.87|                -39.80|
|     14|                 -39.80|                -39.80|
|     15|                 -39.80|                -39.80|
|     16|                 -39.80|                -39.80|
|     17|                 -39.80|                -39.80|
|     18|                 -39.80|                -39.80|
|     19|                 -39.80|                -45.95|
|     20|                 -47.23|                -47.23|
|     21|                 -48.26|                -48.26|
|     22|                 -49.30|                -49.30|
|     23|                 -50.33|                -50.33|
|     24|                 -51.36|                -51.36|
|     25|                 -52.64|                -47.83|
|     26|                 -47.83|                -47.83|
|     27|                 -47.83|                -47.83|
|     28|                 -47.83|                -47.83|
|     29|                 -47.83|                -47.83|
|     30|                 -47.83|                -47.83|
|     31|                 -47.83|                -52.64|
|     32|                 -51.36|                -51.36|
|     33|                 -50.33|                -50.33|
|     34|                 -49.30|                -49.30|
|     35|                 -48.26|                -48.26|
|     36|                 -47.23|                -47.23|
|     37|                 -45.95|                -39.80|
|     38|                 -39.80|                -39.80|
|     39|                 -39.80|                -39.80|
|     40|                 -39.80|                -39.80|
|     41|                 -39.80|                -39.80|
|     42|                 -39.80|                -39.80|
|     43|                 -39.80|                -46.87|
|     44|                 -48.15|                -48.15|
|     45|                 -49.18|                -49.18|
|     46|                 -50.21|                -50.21|
|     47|                 -51.24|                -51.24|
|     48|                 -52.27|                -52.27|
-------------------------------------------------------
```

```
#######################################################
#            SOLICITAÇÕES NORMAIS (ELU)               #
#                      VmaxHmax                       #
#######################################################
-------------------------------------------------------
           ESFORÇO NORMAL NAS SEÇÕES DE INTERESSE
-------------------------------------------------------
|  SEÇÃO|          ESQUERDA (kN)|          DIREITA (kN)|
-------------------------------------------------------
|      1|                 -77.50|                -32.08|
|      2|                 -32.08|                -32.08|
|      3|                 -32.08|                -32.08|
|      4|                 -32.08|                -32.08|
|      5|                 -32.08|                -32.08|
|      6|                 -32.08|                -32.08|
|      7|                 -32.08|                -89.77|
|      8|                 -88.11|                -88.11|
|      9|                 -86.77|                -86.77|
|     10|                 -85.43|                -85.43|
|     11|                 -84.09|                -84.09|
|     12|                 -82.75|                -82.75|
|     13|                 -81.08|                -26.34|
|     14|                 -26.34|                -26.34|
|     15|                 -26.34|                -26.34|
|     16|                 -26.34|                -26.34|
|     17|                 -26.34|                -26.34|
|     18|                 -26.34|                -26.34|
|     19|                 -26.34|                -68.81|
|     20|                 -70.47|                -70.47|
|     21|                 -71.82|                -71.82|
|     22|                 -73.16|                -73.16|
|     23|                 -74.50|                -74.50|
|     24|                 -75.84|                -75.84|
|     25|                 -77.50|                -32.08|
|     26|                 -32.08|                -32.08|
|     27|                 -32.08|                -32.08|
|     28|                 -32.08|                -32.08|
|     29|                 -32.08|                -32.08|
|     30|                 -32.08|                -32.08|
|     31|                 -32.08|                -77.50|
|     32|                 -75.84|                -75.84|
|     33|                 -74.50|                -74.50|
|     34|                 -73.16|                -73.16|
|     35|                 -71.82|                -71.82|
|     36|                 -70.47|                -70.47|
|     37|                 -68.81|                -26.34|
|     38|                 -26.34|                -26.34|
|     39|                 -26.34|                -26.34|
|     40|                 -26.34|                -26.34|
|     41|                 -26.34|                -26.34|
|     42|                 -26.34|                -26.34|
|     43|                 -26.34|                -81.08|
|     44|                 -82.75|                -82.75|
|     45|                 -84.09|                -84.09|
|     46|                 -85.43|                -85.43|
|     47|                 -86.77|                -86.77|
|     48|                 -88.11|                -88.11|
-------------------------------------------------------
```

```
#######################################################
#          SOLICITAÇÕES TANGENCIAIS (ELU)             #
#                      VmaxHmin                       #
#######################################################
-------------------------------------------------------
            ESFORÇO NORMAL NAS SEÇÕES DE INTERESSE
-------------------------------------------------------
|  SEÇÃO|          ESQUERDA (kN)|          DIREITA (kN)|
-------------------------------------------------------
|      1|                 -78.74|                -10.31|
|      2|                 -10.31|                -10.31|
|      3|                 -10.31|                -10.31|
|      4|                 -10.31|                -10.31|
|      5|                 -10.31|                -10.31|
|      6|                 -10.31|                -10.31|
|      7|                 -10.31|                -88.54|
|      8|                 -86.87|                -86.87|
|      9|                 -85.53|                -85.53|
|     10|                 -84.19|                -84.19|
|     11|                 -82.85|                -82.85|
|     12|                 -81.51|                -81.51|
|     13|                 -79.84|                -12.46|
|     14|                 -12.46|                -12.46|
|     15|                 -12.46|                -12.46|
|     16|                 -12.46|                -12.46|
|     17|                 -12.46|                -12.46|
|     18|                 -12.46|                -12.46|
|     19|                 -12.46|                -70.04|
|     20|                 -71.71|                -71.71|
|     21|                 -73.05|                -73.05|
|     22|                 -74.39|                -74.39|
|     23|                 -75.73|                -75.73|
|     24|                 -77.07|                -77.07|
|     25|                 -78.74|                -11.40|
|     26|                 -11.40|                -11.40|
|     27|                 -11.40|                -11.40|
|     28|                 -11.40|                -11.40|
|     29|                 -11.40|                -11.40|
|     30|                 -11.40|                -11.40|
|     31|                 -11.40|                -73.45|
|     32|                 -71.78|                -71.78|
|     33|                 -70.44|                -70.44|
|     34|                 -69.10|                -69.10|
|     35|                 -67.76|                -67.76|
|     36|                 -66.42|                -66.42|
|     37|                 -64.75|                -11.37|
|     38|                 -11.37|                -11.37|
|     39|                 -11.37|                -11.37|
|     40|                 -11.37|                -11.37|
|     41|                 -11.37|                -11.37|
|     42|                 -11.37|                -11.37|
|     43|                 -11.37|                -85.13|
|     44|                 -86.80|                -86.80|
|     45|                 -88.14|                -88.14|
|     46|                 -89.48|                -89.48|
|     47|                 -90.82|                -90.82|
|     48|                 -92.16|                -92.16|
-------------------------------------------------------
```

```
#######################################################
#          SOLICITAÇÕES TANGENCIAIS (ELU)             #
#                     VminHmax                        #
#######################################################
-------------------------------------------------------
            ESFORÇO NORMAL NAS SEÇÕES DE INTERESSE
-------------------------------------------------------
|  SEÇÃO|          ESQUERDA (kN)|          DIREITA (kN)|
-------------------------------------------------------
|      1|                 -53.10|                -47.73|
|      2|                 -47.73|                -47.73|
|      3|                 -47.73|                -47.73|
|      4|                 -47.73|                -47.73|
|      5|                 -47.73|                -47.73|
|      6|                 -47.73|                -47.73|
|      7|                 -47.73|                -53.10|
|      8|                 -51.82|                -51.82|
|      9|                 -50.78|                -50.78|
|     10|                 -49.75|                -49.75|
|     11|                 -48.72|                -48.72|
|     12|                 -47.69|                -47.69|
|     13|                 -46.41|                -39.89|
|     14|                 -39.89|                -39.89|
|     15|                 -39.89|                -39.89|
|     16|                 -39.89|                -39.89|
|     17|                 -39.89|                -39.89|
|     18|                 -39.89|                -39.89|
|     19|                 -39.89|                -46.41|
|     20|                 -47.69|                -47.69|
|     21|                 -48.72|                -48.72|
|     22|                 -49.75|                -49.75|
|     23|                 -50.78|                -50.78|
|     24|                 -51.81|                -51.81|
|     25|                 -53.10|                -47.81|
|     26|                 -47.81|                -47.81|
|     27|                 -47.81|                -47.81|
|     28|                 -47.81|                -47.81|
|     29|                 -47.81|                -47.81|
|     30|                 -47.81|                -47.81|
|     31|                 -47.81|                -52.49|
|     32|                 -51.21|                -51.21|
|     33|                 -50.18|                -50.18|
|     34|                 -49.14|                -49.14|
|     35|                 -48.11|                -48.11|
|     36|                 -47.08|                -47.08|
|     37|                 -45.80|                -39.81|
|     38|                 -39.81|                -39.81|
|     39|                 -39.81|                -39.81|
|     40|                 -39.81|                -39.81|
|     41|                 -39.81|                -39.81|
|     42|                 -39.81|                -39.81|
|     43|                 -39.81|                -47.02|
|     44|                 -48.30|                -48.30|
|     45|                 -49.33|                -49.33|
|     46|                 -50.36|                -50.36|
|     47|                 -51.39|                -51.39|
|     48|                 -52.42|                -52.42|
-------------------------------------------------------
```

```
#######################################################
#          SOLICITAÇÕES TANGENCIAIS (ELU)             #
#                      VmaxHmax                       #
#######################################################
-------------------------------------------------------
            ESFORÇO NORMAL NAS SEÇÕES DE INTERESSE
-------------------------------------------------------
|  SEÇÃO|          ESQUERDA (kN)|          DIREITA (kN)|
-------------------------------------------------------
|      1|                 -79.36|                -31.48|
|      2|                 -31.48|                -31.48|
|      3|                 -31.48|                -31.48|
|      4|                 -31.48|                -31.48|
|      5|                 -31.48|                -31.48|
|      6|                 -31.48|                -31.48|
|      7|                 -31.48|                -87.91|
|      8|                 -86.25|                -86.25|
|      9|                 -84.91|                -84.91|
|     10|                 -83.57|                -83.57|
|     11|                 -82.23|                -82.23|
|     12|                 -80.88|                -80.88|
|     13|                 -79.22|                -26.94|
|     14|                 -26.94|                -26.94|
|     15|                 -26.94|                -26.94|
|     16|                 -26.94|                -26.94|
|     17|                 -26.94|                -26.94|
|     18|                 -26.94|                -26.94|
|     19|                 -26.94|                -70.67|
|     20|                 -72.34|                -72.34|
|     21|                 -73.68|                -73.68|
|     22|                 -75.02|                -75.02|
|     23|                 -76.36|                -76.36|
|     24|                 -77.70|                -77.70|
|     25|                 -79.36|                -32.27|
|     26|                 -32.27|                -32.27|
|     27|                 -32.27|                -32.27|
|     28|                 -32.27|                -32.27|
|     29|                 -32.27|                -32.27|
|     30|                 -32.27|                -32.27|
|     31|                 -32.27|                -75.63|
|     32|                 -73.97|                -73.97|
|     33|                 -72.63|                -72.63|
|     34|                 -71.29|                -71.29|
|     35|                 -69.95|                -69.95|
|     36|                 -68.61|                -68.61|
|     37|                 -66.94|                -26.14|
|     38|                 -26.14|                -26.14|
|     39|                 -26.14|                -26.14|
|     40|                 -26.14|                -26.14|
|     41|                 -26.14|                -26.14|
|     42|                 -26.14|                -26.14|
|     43|                 -26.14|                -82.95|
|     44|                 -84.62|                -84.62|
|     45|                 -85.96|                -85.96|
|     46|                 -87.30|                -87.30|
|     47|                 -88.64|                -88.64|
|     48|                 -89.98|                -89.98|
-------------------------------------------------------
```

```
#######################################################
#              VERIFICAÇÃO DA FADIGA (ELS)            #
#                      VmaxHmin                       #
#######################################################
-------------------------------------------------------
            ESFORÇO NORMAL NAS SEÇÕES DE INTERESSE
-------------------------------------------------------
|  SEÇÃO|          ESQUERDA (kN)|          DIREITA (kN)|
-------------------------------------------------------
|      1|                 -55.22|                -21.07|
|      2|                 -21.07|                -21.07|
|      3|                 -21.07|                -21.07|
|      4|                 -21.07|                -21.07|
|      5|                 -21.07|                -21.07|
|      6|                 -21.07|                -21.07|
|      7|                 -21.07|                -64.27|
|      8|                 -62.99|                -62.99|
|      9|                 -61.96|                -61.96|
|     10|                 -60.92|                -60.92|
|     11|                 -59.89|                -59.89|
|     12|                 -58.86|                -58.86|
|     13|                 -57.58|                -16.55|
|     14|                 -16.55|                -16.55|
|     15|                 -16.55|                -16.55|
|     16|                 -16.55|                -16.55|
|     17|                 -16.55|                -16.55|
|     18|                 -16.55|                -16.55|
|     19|                 -16.55|                -48.53|
|     20|                 -49.81|                -49.81|
|     21|                 -50.84|                -50.84|
|     22|                 -51.87|                -51.87|
|     23|                 -52.90|                -52.90|
|     24|                 -53.93|                -53.93|
|     25|                 -55.22|                -21.07|
|     26|                 -21.07|                -21.07|
|     27|                 -21.07|                -21.07|
|     28|                 -21.07|                -21.07|
|     29|                 -21.07|                -21.07|
|     30|                 -21.07|                -21.07|
|     31|                 -21.07|                -55.22|
|     32|                 -53.93|                -53.93|
|     33|                 -52.90|                -52.90|
|     34|                 -51.87|                -51.87|
|     35|                 -50.84|                -50.84|
|     36|                 -49.81|                -49.81|
|     37|                 -48.53|                -16.55|
|     38|                 -16.55|                -16.55|
|     39|                 -16.55|                -16.55|
|     40|                 -16.55|                -16.55|
|     41|                 -16.55|                -16.55|
|     42|                 -16.55|                -16.55|
|     43|                 -16.55|                -57.58|
|     44|                 -58.86|                -58.86|
|     45|                 -59.89|                -59.89|
|     46|                 -60.92|                -60.92|
|     47|                 -61.96|                -61.96|
|     48|                 -62.99|                -62.99|
-------------------------------------------------------
```

```
#######################################################
#             VERIFICAÇÃO DA FADIGA (ELS)             #
#                      VminHmax                       #
#######################################################
-------------------------------------------------------
            ESFORÇO NORMAL NAS SEÇÕES DE INTERESSE
-------------------------------------------------------
|  SEÇÃO|          ESQUERDA (kN)|          DIREITA (kN)|
-------------------------------------------------------
|      1|                 -50.41|                -34.43|
|      2|                 -34.43|                -34.43|
|      3|                 -34.43|                -34.43|
|      4|                 -34.43|                -34.43|
|      5|                 -34.43|                -34.43|
|      6|                 -34.43|                -34.43|
|      7|                 -34.43|                -55.78|
|      8|                 -54.50|                -54.50|
|      9|                 -53.47|                -53.47|
|     10|                 -52.44|                -52.44|
|     11|                 -51.40|                -51.40|
|     12|                 -50.37|                -50.37|
|     13|                 -49.09|                -28.10|
|     14|                 -28.10|                -28.10|
|     15|                 -28.10|                -28.10|
|     16|                 -28.10|                -28.10|
|     17|                 -28.10|                -28.10|
|     18|                 -28.10|                -28.10|
|     19|                 -28.10|                -43.73|
|     20|                 -45.01|                -45.01|
|     21|                 -46.04|                -46.04|
|     22|                 -47.07|                -47.07|
|     23|                 -48.10|                -48.10|
|     24|                 -49.13|                -49.13|
|     25|                 -50.41|                -34.43|
|     26|                 -34.43|                -34.43|
|     27|                 -34.43|                -34.43|
|     28|                 -34.43|                -34.43|
|     29|                 -34.43|                -34.43|
|     30|                 -34.43|                -34.43|
|     31|                 -34.43|                -50.41|
|     32|                 -49.13|                -49.13|
|     33|                 -48.10|                -48.10|
|     34|                 -47.07|                -47.07|
|     35|                 -46.04|                -46.04|
|     36|                 -45.01|                -45.01|
|     37|                 -43.73|                -28.10|
|     38|                 -28.10|                -28.10|
|     39|                 -28.10|                -28.10|
|     40|                 -28.10|                -28.10|
|     41|                 -28.10|                -28.10|
|     42|                 -28.10|                -28.10|
|     43|                 -28.10|                -49.09|
|     44|                 -50.37|                -50.37|
|     45|                 -51.40|                -51.40|
|     46|                 -52.44|                -52.44|
|     47|                 -53.47|                -53.47|
|     48|                 -54.50|                -54.50|
-------------------------------------------------------
```

```
#######################################################
#              VERIFICAÇÃO DA FADIGA (ELS)            #
#                      VmaxHmax                       #
#######################################################
-------------------------------------------------------
            ESFORÇO NORMAL NAS SEÇÕES DE INTERESSE
-------------------------------------------------------
|  SEÇÃO|          ESQUERDA (kN)|          DIREITA (kN)|
-------------------------------------------------------
|      1|                 -55.38|                -23.06|
|      2|                 -23.06|                -23.06|
|      3|                 -23.06|                -23.06|
|      4|                 -23.06|                -23.06|
|      5|                 -23.06|                -23.06|
|      6|                 -23.06|                -23.06|
|      7|                 -23.06|                -64.10|
|      8|                 -62.82|                -62.82|
|      9|                 -61.79|                -61.79|
|     10|                 -60.75|                -60.75|
|     11|                 -59.72|                -59.72|
|     12|                 -58.69|                -58.69|
|     13|                 -57.41|                -18.62|
|     14|                 -18.62|                -18.62|
|     15|                 -18.62|                -18.62|
|     16|                 -18.62|                -18.62|
|     17|                 -18.62|                -18.62|
|     18|                 -18.62|                -18.62|
|     19|                 -18.62|                -48.70|
|     20|                 -49.98|                -49.98|
|     21|                 -51.01|                -51.01|
|     22|                 -52.04|                -52.04|
|     23|                 -53.07|                -53.07|
|     24|                 -54.10|                -54.10|
|     25|                 -55.38|                -23.06|
|     26|                 -23.06|                -23.06|
|     27|                 -23.06|                -23.06|
|     28|                 -23.06|                -23.06|
|     29|                 -23.06|                -23.06|
|     30|                 -23.06|                -23.06|
|     31|                 -23.06|                -55.38|
|     32|                 -54.10|                -54.10|
|     33|                 -53.07|                -53.07|
|     34|                 -52.04|                -52.04|
|     35|                 -51.01|                -51.01|
|     36|                 -49.98|                -49.98|
|     37|                 -48.70|                -18.62|
|     38|                 -18.62|                -18.62|
|     39|                 -18.62|                -18.62|
|     40|                 -18.62|                -18.62|
|     41|                 -18.62|                -18.62|
|     42|                 -18.62|                -18.62|
|     43|                 -18.62|                -57.41|
|     44|                 -58.69|                -58.69|
|     45|                 -59.72|                -59.72|
|     46|                 -60.75|                -60.75|
|     47|                 -61.79|                -61.79|
|     48|                 -62.82|                -62.82|
-------------------------------------------------------
```

```
#######################################################
#              VERIFICAÇÃO DA FADIGA (ELS)            #
#                      VminHmin                       #
#######################################################
-------------------------------------------------------
            ESFORÇO NORMAL NAS SEÇÕES DE INTERESSE
-------------------------------------------------------
|  SEÇÃO|          ESQUERDA (kN)|          DIREITA (kN)|
-------------------------------------------------------
|      1|                 -54.08|                -20.77|
|      2|                 -20.77|                -20.77|
|      3|                 -20.77|                -20.77|
|      4|                 -20.77|                -20.77|
|      5|                 -20.77|                -20.77|
|      6|                 -20.77|                -20.77|
|      7|                 -20.77|                -52.11|
|      8|                 -50.83|                -50.83|
|      9|                 -49.80|                -49.80|
|     10|                 -48.77|                -48.77|
|     11|                 -47.74|                -47.74|
|     12|                 -46.70|                -46.70|
|     13|                 -45.42|                -16.85|
|     14|                 -16.85|                -16.85|
|     15|                 -16.85|                -16.85|
|     16|                 -16.85|                -16.85|
|     17|                 -16.85|                -16.85|
|     18|                 -16.85|                -16.85|
|     19|                 -16.85|                -47.39|
|     20|                 -48.68|                -48.68|
|     21|                 -49.71|                -49.71|
|     22|                 -50.74|                -50.74|
|     23|                 -51.77|                -51.77|
|     24|                 -52.80|                -52.80|
|     25|                 -54.08|                  0.15|
|     26|                   0.15|                  0.15|
|     27|                   0.15|                  0.15|
|     28|                   0.15|                  0.15|
|     29|                   0.15|                  0.15|
|     30|                   0.15|                  0.15|
|     31|                   0.15|                 -0.91|
|     32|                  -0.91|                 -0.91|
|     33|                  -0.91|                 -0.91|
|     34|                  -0.91|                 -0.91|
|     35|                  -0.91|                 -0.91|
|     36|                  -0.91|                 -0.91|
|     37|                  -0.91|                 -0.15|
|     38|                  -0.15|                 -0.15|
|     39|                  -0.15|                 -0.15|
|     40|                  -0.15|                 -0.15|
|     41|                  -0.15|                 -0.15|
|     42|                  -0.15|                 -0.15|
|     43|                  -0.15|                  0.91|
|     44|                  -0.37|                 -0.37|
|     45|                  -1.40|                 -1.40|
|     46|                  -2.43|                 -2.43|
|     47|                  -3.46|                 -3.46|
|     48|                  -4.50|                 -4.50|
-------------------------------------------------------
```

```
#######################################################
#           VERIFICAÇÃO DA FISSURAÇÃO (ELS)           #
#                      VmaxHmin                       #
#######################################################
-------------------------------------------------------
            ESFORÇO NORMAL NAS SEÇÕES DE INTERESSE
-------------------------------------------------------
|  SEÇÃO|          ESQUERDA (kN)|          DIREITA (kN)|
-------------------------------------------------------
|      1|                 -52.99|                -21.10|
|      2|                 -21.10|                -21.10|
|      3|                 -21.10|                -21.10|
|      4|                 -21.10|                -21.10|
|      5|                 -21.10|                -21.10|
|      6|                 -21.10|                -21.10|
|      7|                 -21.10|                -61.51|
|      8|                 -60.23|                -60.23|
|      9|                 -59.20|                -59.20|
|     10|                 -58.17|                -58.17|
|     11|                 -57.14|                -57.14|
|     12|                 -56.11|                -56.11|
|     13|                 -54.82|                -16.52|
|     14|                 -16.52|                -16.52|
|     15|                 -16.52|                -16.52|
|     16|                 -16.52|                -16.52|
|     17|                 -16.52|                -16.52|
|     18|                 -16.52|                -16.52|
|     19|                 -16.52|                -46.30|
|     20|                 -47.58|                -47.58|
|     21|                 -48.61|                -48.61|
|     22|                 -49.64|                -49.64|
|     23|                 -50.68|                -50.68|
|     24|                 -51.71|                -51.71|
|     25|                 -52.99|                -21.10|
|     26|                 -21.10|                -21.10|
|     27|                 -21.10|                -21.10|
|     28|                 -21.10|                -21.10|
|     29|                 -21.10|                -21.10|
|     30|                 -21.10|                -21.10|
|     31|                 -21.10|                -52.99|
|     32|                 -51.71|                -51.71|
|     33|                 -50.68|                -50.68|
|     34|                 -49.64|                -49.64|
|     35|                 -48.61|                -48.61|
|     36|                 -47.58|                -47.58|
|     37|                 -46.30|                -16.52|
|     38|                 -16.52|                -16.52|
|     39|                 -16.52|                -16.52|
|     40|                 -16.52|                -16.52|
|     41|                 -16.52|                -16.52|
|     42|                 -16.52|                -16.52|
|     43|                 -16.52|                -54.82|
|     44|                 -56.11|                -56.11|
|     45|                 -57.14|                -57.14|
|     46|                 -58.17|                -58.17|
|     47|                 -59.20|                -59.20|
|     48|                 -60.23|                -60.23|
-------------------------------------------------------
```

```
#######################################################
#           VERIFICAÇÃO DA FISSURAÇÃO (ELS)           #
#                      VminHmax                       #
#######################################################
-------------------------------------------------------
            ESFORÇO NORMAL NAS SEÇÕES DE INTERESSE
-------------------------------------------------------
|  SEÇÃO|          ESQUERDA (kN)|          DIREITA (kN)|
-------------------------------------------------------
|      1|                 -50.24|                -33.31|
|      2|                 -33.31|                -33.31|
|      3|                 -33.31|                -33.31|
|      4|                 -33.31|                -33.31|
|      5|                 -33.31|                -33.31|
|      6|                 -33.31|                -33.31|
|      7|                 -33.31|                -55.95|
|      8|                 -54.67|                -54.67|
|      9|                 -53.64|                -53.64|
|     10|                 -52.61|                -52.61|
|     11|                 -51.58|                -51.58|
|     12|                 -50.55|                -50.55|
|     13|                 -49.27|                -26.93|
|     14|                 -26.93|                -26.93|
|     15|                 -26.93|                -26.93|
|     16|                 -26.93|                -26.93|
|     17|                 -26.93|                -26.93|
|     18|                 -26.93|                -26.93|
|     19|                 -26.93|                -43.55|
|     20|                 -44.83|                -44.83|
|     21|                 -45.86|                -45.86|
|     22|                 -46.89|                -46.89|
|     23|                 -47.93|                -47.93|
|     24|                 -48.96|                -48.96|
|     25|                 -50.24|                -33.31|
|     26|                 -33.31|                -33.31|
|     27|                 -33.31|                -33.31|
|     28|                 -33.31|                -33.31|
|     29|                 -33.31|                -33.31|
|     30|                 -33.31|                -33.31|
|     31|                 -33.31|                -50.24|
|     32|                 -48.96|                -48.96|
|     33|                 -47.93|                -47.93|
|     34|                 -46.89|                -46.89|
|     35|                 -45.86|                -45.86|
|     36|                 -44.83|                -44.83|
|     37|                 -43.55|                -26.93|
|     38|                 -26.93|                -26.93|
|     39|                 -26.93|                -26.93|
|     40|                 -26.93|                -26.93|
|     41|                 -26.93|                -26.93|
|     42|                 -26.93|                -26.93|
|     43|                 -26.93|                -49.27|
|     44|                 -50.55|                -50.55|
|     45|                 -51.58|                -51.58|
|     46|                 -52.61|                -52.61|
|     47|                 -53.64|                -53.64|
|     48|                 -54.67|                -54.67|
-------------------------------------------------------
```

```
#######################################################
#           VERIFICAÇÃO DA FISSURAÇÃO (ELS)           #
#                      VmaxHmax                       #
#######################################################
-------------------------------------------------------
            ESFORÇO NORMAL NAS SEÇÕES DE INTERESSE
-------------------------------------------------------
|  SEÇÃO|          ESQUERDA (kN)|          DIREITA (kN)|
-------------------------------------------------------
|      1|                 -53.09|                -22.35|
|      2|                 -22.35|                -22.35|
|      3|                 -22.35|                -22.35|
|      4|                 -22.35|                -22.35|
|      5|                 -22.35|                -22.35|
|      6|                 -22.35|                -22.35|
|      7|                 -22.35|                -61.41|
|      8|                 -60.12|                -60.12|
|      9|                 -59.09|                -59.09|
|     10|                 -58.06|                -58.06|
|     11|                 -57.03|                -57.03|
|     12|                 -56.00|                -56.00|
|     13|                 -54.72|                -17.81|
|     14|                 -17.81|                -17.81|
|     15|                 -17.81|                -17.81|
|     16|                 -17.81|                -17.81|
|     17|                 -17.81|                -17.81|
|     18|                 -17.81|                -17.81|
|     19|                 -17.81|                -46.41|
|     20|                 -47.69|                -47.69|
|     21|                 -48.72|                -48.72|
|     22|                 -49.75|                -49.75|
|     23|                 -50.78|                -50.78|
|     24|                 -51.81|                -51.81|
|     25|                 -53.09|                -22.35|
|     26|                 -22.35|                -22.35|
|     27|                 -22.35|                -22.35|
|     28|                 -22.35|                -22.35|
|     29|                 -22.35|                -22.35|
|     30|                 -22.35|                -22.35|
|     31|                 -22.35|                -53.09|
|     32|                 -51.81|                -51.81|
|     33|                 -50.78|                -50.78|
|     34|                 -49.75|                -49.75|
|     35|                 -48.72|                -48.72|
|     36|                 -47.69|                -47.69|
|     37|                 -46.41|                -17.81|
|     38|                 -17.81|                -17.81|
|     39|                 -17.81|                -17.81|
|     40|                 -17.81|                -17.81|
|     41|                 -17.81|                -17.81|
|     42|                 -17.81|                -17.81|
|     43|                 -17.81|                -54.72|
|     44|                 -56.00|                -56.00|
|     45|                 -57.03|                -57.03|
|     46|                 -58.06|                -58.06|
|     47|                 -59.09|                -59.09|
|     48|                 -60.12|                -60.12|
-------------------------------------------------------
```

ESFORÇO CORTANTE

NOMENCLATURA DAS SEÇÕES PARA VERSÃO COMPLETA DO RELATÓRIO

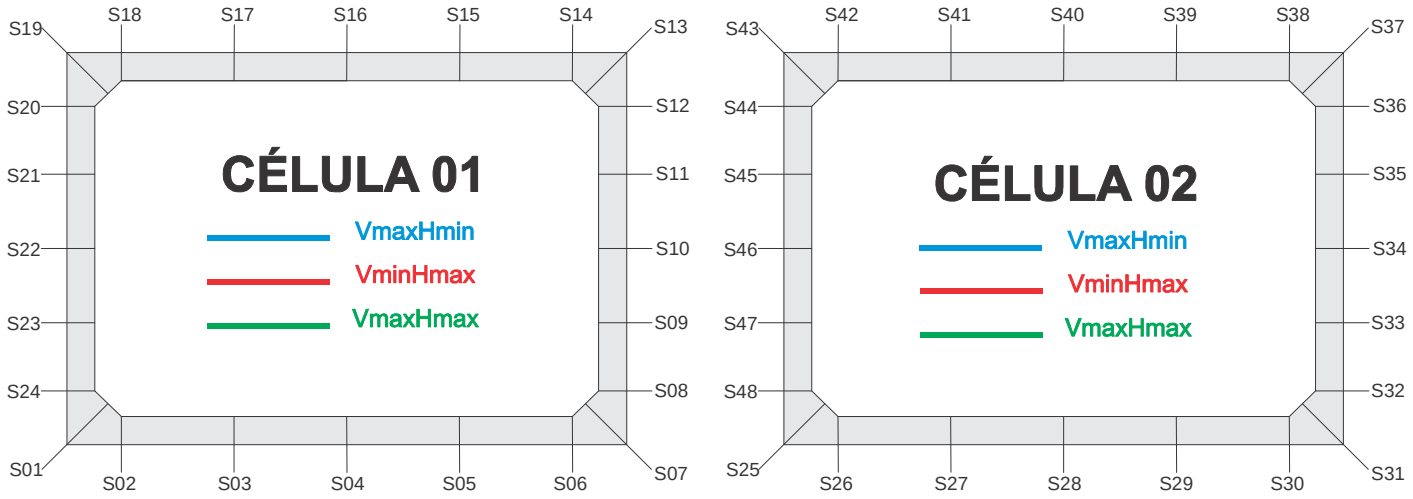

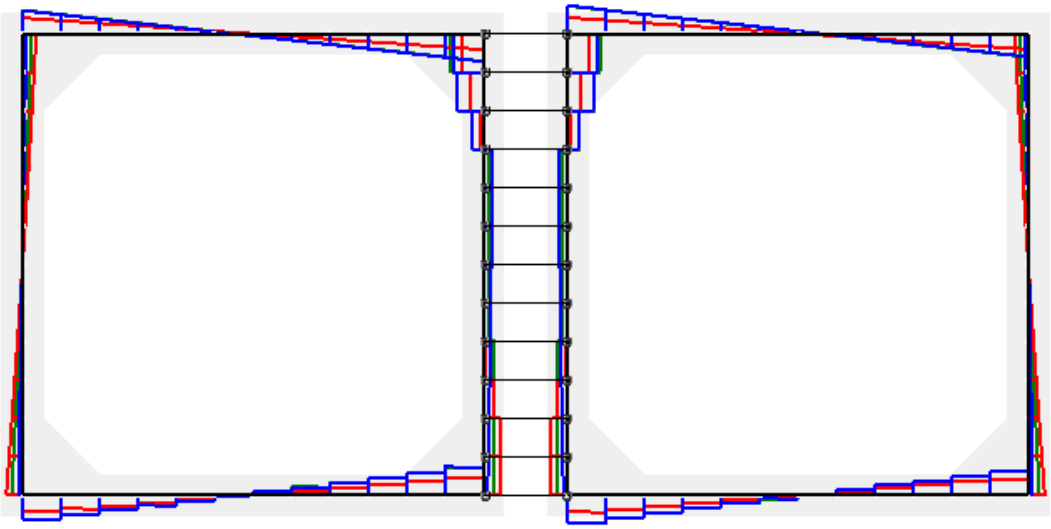

```
#######################################################
#            SOLICITAÇÕES NORMAIS (ELU)               #
#                      VmaxHmin                       #
#######################################################
-------------------------------------------------------
          ESFORÇOS CORTANTE NAS SEÇÕES DE INTERESSE
-------------------------------------------------------
|  SEÇÃO|          ESQUERDA (kN)|          DIREITA (kN)|
-------------------------------------------------------
|      1|                 11.43|               -69.27|
|      2|                -56.63|               -42.53|
|      3|                -29.94|               -16.12|
|      4|                 -3.62|                10.36|
|      5|                 23.30|                37.99|
|      6|                 51.86|                67.63|
|      7|                 82.30|               -11.43|
|      8|                -15.97|               -15.97|
|      9|                -19.69|               -19.69|
|     10|                -22.57|               -22.57|
|     11|                -24.64|               -24.64|
|     12|                 31.70|                76.27|
|     13|                 87.58|               -82.06|
|     14|                -56.86|               -56.86|
|     15|                -31.99|               -31.99|
|     16|                 -7.11|                -7.11|
|     17|                 17.76|                17.76|
|     18|                 42.63|                42.63|
|     19|                 67.83|               -11.34|
|     20|                 -6.72|                -6.72|
|     21|                 -2.43|                -2.43|
|     22|                  1.53|                 1.53|
|     23|                  5.16|                 5.16|
|     24|                  8.46|                 8.46|
|     25|                 11.43|               -82.30|
|     26|                -67.63|               -51.86|
|     27|                -37.99|               -23.30|
|     28|                -10.36|                 3.62|
|     29|                 16.12|                29.94|
|     30|                 42.53|                56.63|
|     31|                 69.27|               -11.43|
|     32|                 -8.46|                -8.46|
|     33|                 -5.16|                -5.16|
|     34|                 -1.53|                -1.53|
|     35|                  2.43|                 2.43|
|     36|                  6.72|                 6.72|
|     37|                 11.34|               -67.83|
|     38|                -42.63|               -42.63|
|     39|                -17.76|               -17.76|
|     40|                  7.11|                 7.11|
|     41|                 31.99|                31.99|
|     42|                 56.86|                56.86|
|     43|                 82.06|               -87.58|
|     44|                -76.27|               -31.70|
|     45|                 24.64|                24.64|
|     46|                 22.57|                22.57|
|     47|                 19.69|                19.69|
|     48|                 15.97|                15.97|
-------------------------------------------------------
```

```
#######################################################
#            SOLICITAÇÕES NORMAIS (ELU)               #
#                      VminHmax                       #
#######################################################
-------------------------------------------------------
          ESFORÇOS CORTANTE NAS SEÇÕES DE INTERESSE
-------------------------------------------------------
|  SEÇÃO|          ESQUERDA (kN)|          DIREITA (kN)|
-------------------------------------------------------
|      1|                 47.83|               -47.87|
|      2|                -39.65|               -30.20|
|      3|                -21.84|               -12.52|
|      4|                 -4.29|                 4.96|
|      5|                 13.22|                22.56|
|      6|                 30.96|                40.47|
|      7|                 48.75|               -47.83|
|      8|                -47.83|               -28.04|
|      9|                 -3.12|                 0.01|
|     10|                  0.01|                 0.01|
|     11|                  0.01|                 0.01|
|     12|                 11.42|                40.80|
|     13|                 61.34|               -46.87|
|     14|                -31.23|               -31.23|
|     15|                -15.84|               -15.84|
|     16|                 -0.46|                -0.46|
|     17|                 14.93|                14.93|
|     18|                 30.32|                30.32|
|     19|                 45.95|               -39.80|
|     20|                -27.56|               -27.56|
|     21|                -14.37|               -14.37|
|     22|                 -0.24|                -0.24|
|     23|                 14.84|                14.84|
|     24|                 30.86|                30.86|
|     25|                 47.83|               -48.75|
|     26|                -40.47|               -30.96|
|     27|                -22.56|               -13.22|
|     28|                 -4.96|                 4.29|
|     29|                 12.52|                21.84|
|     30|                 30.20|                39.65|
|     31|                 47.87|               -47.83|
|     32|                -30.86|               -30.86|
|     33|                -14.84|               -14.84|
|     34|                  0.24|                 0.24|
|     35|                 14.37|                14.37|
|     36|                 27.56|                27.56|
|     37|                 39.80|               -45.95|
|     38|                -30.32|               -30.32|
|     39|                -14.93|               -14.93|
|     40|                  0.46|                 0.46|
|     41|                 15.84|                15.84|
|     42|                 31.23|                31.23|
|     43|                 46.87|               -61.34|
|     44|                -40.80|               -11.42|
|     45|                 -0.01|                -0.01|
|     46|                 -0.01|                -0.01|
|     47|                 -0.01|                 3.12|
|     48|                 28.04|                47.83|
-------------------------------------------------------
```

```
#####################################################
#            SOLICITAÇÕES NORMAIS (ELU)             #
#                     VmaxHmax                      #
#####################################################
-----------------------------------------------------
          ESFORÇOS CORTANTE NAS SEÇÕES DE INTERESSE
-----------------------------------------------------
|  SEÇÃO|          ESQUERDA (kN)|          DIREITA (kN)|
-----------------------------------------------------
|      1|                 32.08|                -70.13|
|      2|                -57.22|                -42.83|
|      3|                -29.95|                -15.86|
|      4|                 -3.13|                 11.02|
|      5|                 24.02|                 38.64|
|      6|                 52.29|                 67.66|
|      7|                 81.73|                -32.08|
|      8|                -32.08|                -32.08|
|      9|                -32.08|                -14.87|
|     10|                -14.87|                -14.87|
|     11|                -14.87|                -14.87|
|     12|                 34.24|                 78.66|
|     13|                 95.41|                -81.08|
|     14|                -55.88|                -55.88|
|     15|                -31.01|                -31.01|
|     16|                 -6.14|                 -6.14|
|     17|                 18.74|                 18.74|
|     18|                 43.61|                 43.61|
|     19|                 68.81|                -26.34|
|     20|                -18.18|                -18.18|
|     21|                 -9.39|                 -9.39|
|     22|                  0.03|                  0.03|
|     23|                 10.09|                 10.09|
|     24|                 20.77|                 20.77|
|     25|                 32.08|                -81.73|
|     26|                -67.66|                -52.29|
|     27|                -38.64|                -24.02|
|     28|                -11.02|                  3.13|
|     29|                 15.86|                 29.95|
|     30|                 42.83|                 57.22|
|     31|                 70.13|                -32.08|
|     32|                -20.77|                -20.77|
|     33|                -10.09|                -10.09|
|     34|                 -0.03|                 -0.03|
|     35|                  9.39|                  9.39|
|     36|                 18.18|                 18.18|
|     37|                 26.34|                -68.81|
|     38|                -43.61|                -43.61|
|     39|                -18.74|                -18.74|
|     40|                  6.14|                  6.14|
|     41|                 31.01|                 31.01|
|     42|                 55.88|                 55.88|
|     43|                 81.08|                -95.41|
|     44|                -78.66|                -34.24|
|     45|                 14.87|                 14.87|
|     46|                 14.87|                 14.87|
|     47|                 14.87|                 32.08|
|     48|                 32.08|                 32.08|
-----------------------------------------------------
```

```
#######################################################
#          SOLICITAÇÕES TANGENCIAIS (ELU)             #
#                      VmaxHmin                       #
#######################################################
-------------------------------------------------------
          ESFORÇOS CORTANTE NAS SEÇÕES DE INTERESSE
-------------------------------------------------------
|  SEÇÃO|          ESQUERDA (kN)|          DIREITA (kN)|
-------------------------------------------------------
|      1|                 10.31|                -71.46|
|      2|                -58.80|                -44.72|
|      3|                -32.20|                -18.47|
|      4|                 -6.07|                  7.81|
|      5|                 20.66|                 35.30|
|      6|                 49.18|                 65.05|
|      7|                 79.93|                -10.32|
|      8|                -14.85|                -14.85|
|      9|                -18.57|                -18.57|
|     10|                -21.45|                -21.45|
|     11|                -23.52|                -23.52|
|     12|                 36.97|                 74.11|
|     13|                 90.41|                -79.84|
|     14|                -54.65|                -54.65|
|     15|                -29.77|                -29.77|
|     16|                 -4.90|                 -4.90|
|     17|                 19.97|                 19.97|
|     18|                 44.85|                 44.85|
|     19|                 70.04|                -12.46|
|     20|                 -7.84|                 -7.84|
|     21|                 -3.55|                 -3.55|
|     22|                  0.41|                  0.41|
|     23|                  4.04|                  4.04|
|     24|                  7.34|                  7.34|
|     25|                 10.31|                -85.28|
|     26|                -70.45|                -54.57|
|     27|                -40.65|                -25.96|
|     28|                -13.06|                  0.86|
|     29|                 13.26|                 26.98|
|     30|                 39.48|                 53.53|
|     31|                 66.17|                -11.40|
|     32|                 -8.43|                 -8.43|
|     33|                 -5.13|                 -5.13|
|     34|                 -1.50|                 -1.50|
|     35|                  2.46|                  2.46|
|     36|                  6.75|                  6.75|
|     37|                 11.37|                -64.75|
|     38|                -39.56|                -39.56|
|     39|                -14.68|                -14.68|
|     40|                 10.19|                 10.19|
|     41|                 35.06|                 35.06|
|     42|                 59.94|                 59.94|
|     43|                 85.13|                -89.32|
|     44|                -73.02|                -35.88|
|     45|                 24.61|                 24.61|
|     46|                 22.54|                 22.54|
|     47|                 19.66|                 19.66|
|     48|                 15.94|                 15.94|
-------------------------------------------------------
```

```
#######################################################
#          SOLICITAÇÕES TANGENCIAIS (ELU)             #
#                      VminHmax                       #
#######################################################
-------------------------------------------------------
          ESFORÇOS CORTANTE NAS SEÇÕES DE INTERESSE
-------------------------------------------------------
|  SEÇÃO|          ESQUERDA (kN)|          DIREITA (kN)|
-------------------------------------------------------
|      1|                 47.73|                -48.32|
|      2|                -40.10|                -30.65|
|      3|                -22.30|                -13.00|
|      4|                 -4.77|                  4.46|
|      5|                 12.70|                 22.04|
|      6|                 30.44|                 39.96|
|      7|                 48.27|                -47.73|
|      8|                -47.73|                -26.48|
|      9|                 -0.14|                 -0.14|
|     10|                 -0.14|                 -0.14|
|     11|                 -0.14|                 -0.14|
|     12|                  7.87|                 38.81|
|     13|                 64.38|                -46.41|
|     14|                -30.77|                -30.77|
|     15|                -15.39|                -15.39|
|     16|                  0.00|                  0.00|
|     17|                 15.39|                 15.39|
|     18|                 30.77|                 30.77|
|     19|                 46.41|                -39.89|
|     20|                -27.65|                -27.65|
|     21|                -14.47|                -14.47|
|     22|                 -0.33|                 -0.33|
|     23|                 14.74|                 14.74|
|     24|                 30.77|                 30.77|
|     25|                 47.73|                -48.89|
|     26|                -40.58|                -31.06|
|     27|                -22.65|                -13.31|
|     28|                 -5.07|                  4.17|
|     29|                 12.40|                 21.70|
|     30|                 30.05|                 39.49|
|     31|                 47.72|                -47.81|
|     32|                -30.84|                -30.84|
|     33|                -14.82|                -14.82|
|     34|                  0.26|                  0.26|
|     35|                 14.39|                 14.39|
|     36|                 27.57|                 27.57|
|     37|                 39.81|                -45.80|
|     38|                -30.16|                -30.16|
|     39|                -14.78|                -14.78|
|     40|                  0.61|                  0.61|
|     41|                 15.99|                 15.99|
|     42|                 31.38|                 31.38|
|     43|                 47.02|                -64.30|
|     44|                -38.73|                 -7.79|
|     45|                  0.22|                  0.22|
|     46|                  0.22|                  0.22|
|     47|                  0.22|                  0.22|
|     48|                 26.56|                 47.81|
-------------------------------------------------------
```

```
#######################################################
#          SOLICITAÇÕES TANGENCIAIS (ELU)             #
#                      VmaxHmax                       #
#######################################################
-------------------------------------------------------
          ESFORÇOS CORTANTE NAS SEÇÕES DE INTERESSE
-------------------------------------------------------
|  SEÇÃO|          ESQUERDA (kN)|          DIREITA (kN)|
-------------------------------------------------------
|      1|                 31.48|               -72.00|
|      2|                -59.13|               -44.79|
|      3|                -31.99|               -17.97|
|      4|                 -5.32|                 8.75|
|      5|                 21.69|                36.29|
|      6|                 49.97|                65.45|
|      7|                 79.72|               -31.48|
|      8|                -31.48|               -31.48|
|      9|                -31.48|               -10.83|
|     10|                -10.83|               -10.83|
|     11|                -10.83|               -10.83|
|     12|                 26.40|                71.80|
|     13|                 97.95|               -79.22|
|     14|                -54.02|               -54.02|
|     15|                -29.15|               -29.15|
|     16|                 -4.27|                -4.27|
|     17|                 20.60|                20.60|
|     18|                 45.47|                45.47|
|     19|                 70.67|               -26.94|
|     20|                -18.78|               -18.78|
|     21|                 -9.99|                -9.99|
|     22|                 -0.57|                -0.57|
|     23|                  9.48|                 9.48|
|     24|                 20.17|                20.17|
|     25|                 31.48|               -83.49|
|     26|                -69.26|               -53.78|
|     27|                -40.07|               -25.42|
|     28|                -12.45|                 1.65|
|     29|                 14.29|                28.30|
|     30|                 41.09|                55.41|
|     31|                 68.27|               -32.27|
|     32|                -20.96|               -20.96|
|     33|                -10.28|               -10.28|
|     34|                 -0.23|                -0.23|
|     35|                  9.19|                 9.19|
|     36|                 17.98|                17.98|
|     37|                 26.14|               -66.94|
|     38|                -41.74|               -41.74|
|     39|                -16.87|               -16.87|
|     40|                  8.00|                 8.00|
|     41|                 32.88|                32.88|
|     42|                 57.75|                57.75|
|     43|                 82.95|               -97.15|
|     44|                -71.01|               -25.61|
|     45|                 11.63|                11.63|
|     46|                 11.63|                11.63|
|     47|                 11.63|                32.27|
|     48|                 32.27|                32.27|
-------------------------------------------------------
```

```
#####################################################
#             VERIFICAÇÃO DA FADIGA (ELS)           #
#                      VmaxHmin                     #
#####################################################
-----------------------------------------------------
          ESFORÇOS CORTANTE NAS SEÇÕES DE INTERESSE
-----------------------------------------------------
|  SEÇÃO|          ESQUERDA (kN)|          DIREITA (kN)|
-----------------------------------------------------
|      1|                 21.07|                -49.94|
|      2|                -40.79|                -30.49|
|      3|                -21.35|                -11.26|
|      4|                 -2.23|                  7.90|
|      5|                 17.14|                 27.63|
|      6|                 37.37|                 48.42|
|      7|                 58.47|                -21.07|
|      8|                -21.07|                -21.07|
|      9|                -21.07|                -12.06|
|     10|                -12.06|                -12.06|
|     11|                -12.06|                -12.06|
|     12|                 25.47|                 56.29|
|     13|                 66.97|                -57.58|
|     14|                -39.73|                -39.73|
|     15|                -22.13|                -22.13|
|     16|                 -4.53|                 -4.53|
|     17|                 13.07|                 13.07|
|     18|                 30.68|                 30.68|
|     19|                 48.53|                -16.55|
|     20|                -11.52|                -11.52|
|     21|                 -5.99|                 -5.99|
|     22|                  0.03|                  0.03|
|     23|                  6.55|                  6.55|
|     24|                 13.56|                 13.56|
|     25|                 21.07|                -58.47|
|     26|                -48.42|                -37.37|
|     27|                -27.63|                -17.14|
|     28|                 -7.90|                  2.23|
|     29|                 11.26|                 21.35|
|     30|                 30.49|                 40.79|
|     31|                 49.94|                -21.07|
|     32|                -13.56|                -13.56|
|     33|                 -6.55|                 -6.55|
|     34|                 -0.03|                 -0.03|
|     35|                  5.99|                  5.99|
|     36|                 11.52|                 11.52|
|     37|                 16.55|                -48.53|
|     38|                -30.68|                -30.68|
|     39|                -13.07|                -13.07|
|     40|                  4.53|                  4.53|
|     41|                 22.13|                 22.13|
|     42|                 39.73|                 39.73|
|     43|                 57.58|                -66.97|
|     44|                -56.29|                -25.47|
|     45|                 12.06|                 12.06|
|     46|                 12.06|                 12.06|
|     47|                 12.06|                 21.07|
|     48|                 21.07|                 21.07|
-----------------------------------------------------
```

```
#####################################################
#             VERIFICAÇÃO DA FADIGA (ELS)           #
#                      VminHmax                     #
#####################################################
-----------------------------------------------------
          ESFORÇOS CORTANTE NAS SEÇÕES DE INTERESSE
-----------------------------------------------------
|  SEÇÃO|          ESQUERDA (kN)|          DIREITA (kN)|
-----------------------------------------------------
|      1|                 34.43|               -45.64|
|      2|                -37.45|               -28.06|
|      3|                -19.79|               -10.58|
|      4|                 -2.43|                 6.76|
|      5|                 14.97|                24.33|
|      6|                 32.79|                42.41|
|      7|                 50.86|               -34.43|
|      8|                -34.43|               -34.43|
|      9|                -23.26|                -0.70|
|     10|                 -0.70|                -0.70|
|     11|                 -0.70|                -0.70|
|     12|                 14.28|                45.27|
|     13|                 62.19|               -49.09|
|     14|                -33.46|               -33.46|
|     15|                -18.07|               -18.07|
|     16|                 -2.68|                -2.68|
|     17|                 12.70|                12.70|
|     18|                 28.09|                28.09|
|     19|                 43.73|               -28.10|
|     20|                -19.46|               -19.46|
|     21|                -10.10|               -10.10|
|     22|                 -0.04|                -0.04|
|     23|                 10.74|                10.74|
|     24|                 22.23|                22.23|
|     25|                 34.43|               -50.86|
|     26|                -42.41|               -32.79|
|     27|                -24.33|               -14.97|
|     28|                 -6.76|                 2.43|
|     29|                 10.58|                19.79|
|     30|                 28.06|                37.45|
|     31|                 45.64|               -34.43|
|     32|                -22.23|               -22.23|
|     33|                -10.74|               -10.74|
|     34|                  0.04|                 0.04|
|     35|                 10.10|                10.10|
|     36|                 19.46|                19.46|
|     37|                 28.10|               -43.73|
|     38|                -28.09|               -28.09|
|     39|                -12.70|               -12.70|
|     40|                  2.68|                 2.68|
|     41|                 18.07|                18.07|
|     42|                 33.46|                33.46|
|     43|                 49.09|               -62.19|
|     44|                -45.27|               -14.28|
|     45|                  0.70|                 0.70|
|     46|                  0.70|                 0.70|
|     47|                  0.70|                23.26|
|     48|                 34.43|                34.43|
-----------------------------------------------------
```

```
#####################################################
#             VERIFICAÇÃO DA FADIGA (ELS)           #
#                      VmaxHmax                     #
#####################################################
-----------------------------------------------------
          ESFORÇOS CORTANTE NAS SEÇÕES DE INTERESSE
-----------------------------------------------------
|  SEÇÃO|          ESQUERDA (kN)|          DIREITA (kN)|
-----------------------------------------------------
|      1|                 23.06|                -50.10|
|      2|                -40.93|                -30.61|
|      3|                -21.44|                -11.32|
|      4|                 -2.27|                  7.88|
|      5|                 17.13|                 27.62|
|      6|                 37.33|                 48.34|
|      7|                 58.34|                -23.06|
|      8|                -23.06|                -23.06|
|      9|                -23.06|                -10.49|
|     10|                -10.49|                -10.49|
|     11|                -10.49|                -10.49|
|     12|                 24.22|                 55.70|
|     13|                 67.56|                -57.41|
|     14|                -39.56|                -39.56|
|     15|                -21.96|                -21.96|
|     16|                 -4.36|                 -4.36|
|     17|                 13.24|                 13.24|
|     18|                 30.85|                 30.85|
|     19|                 48.70|                -18.62|
|     20|                -12.86|                -12.86|
|     21|                 -6.63|                 -6.63|
|     22|                  0.08|                  0.08|
|     23|                  7.27|                  7.27|
|     24|                 14.93|                 14.93|
|     25|                 23.06|                -58.34|
|     26|                -48.34|                -37.33|
|     27|                -27.62|                -17.13|
|     28|                 -7.88|                  2.27|
|     29|                 11.32|                 21.44|
|     30|                 30.61|                 40.93|
|     31|                 50.10|                -23.06|
|     32|                -14.93|                -14.93|
|     33|                 -7.27|                 -7.27|
|     34|                 -0.08|                 -0.08|
|     35|                  6.63|                  6.63|
|     36|                 12.86|                 12.86|
|     37|                 18.62|                -48.70|
|     38|                -30.85|                -30.85|
|     39|                -13.24|                -13.24|
|     40|                  4.36|                  4.36|
|     41|                 21.96|                 21.96|
|     42|                 39.56|                 39.56|
|     43|                 57.41|                -67.56|
|     44|                -55.70|                -24.22|
|     45|                 10.49|                 10.49|
|     46|                 10.49|                 10.49|
|     47|                 10.49|                 23.06|
|     48|                 23.06|                 23.06|
-----------------------------------------------------
```

```
#####################################################
#             VERIFICAÇÃO DA FADIGA (ELS)           #
#                      VminHmin                     #
#####################################################
-----------------------------------------------------
          ESFORÇOS CORTANTE NAS SEÇÕES DE INTERESSE
-----------------------------------------------------
|  SEÇÃO|          ESQUERDA (kN)|          DIREITA (kN)|
-----------------------------------------------------
|      1|                 20.77|               -48.79|
|      2|                -39.81|               -29.85|
|      3|                -21.24|               -11.88|
|      4|                 -3.75|                 5.27|
|      5|                 13.20|                22.19|
|      6|                 30.22|                39.40|
|      7|                 47.41|               -20.77|
|      8|                -13.26|               -13.26|
|      9|                 -6.25|                -6.25|
|     10|                  0.27|                 0.27|
|     11|                  6.29|                 6.29|
|     12|                 -8.00|                 9.49|
|     13|                 24.83|               -45.42|
|     14|                -29.79|               -29.79|
|     15|                -14.40|               -14.40|
|     16|                  0.99|                 0.99|
|     17|                 16.37|                16.37|
|     18|                 31.76|                31.76|
|     19|                 47.39|               -16.85|
|     20|                -11.82|               -11.82|
|     21|                 -6.29|                -6.29|
|     22|                 -0.27|                -0.27|
|     23|                  6.25|                 6.25|
|     24|                 13.26|                13.26|
|     25|                 20.77|                -4.74|
|     26|                 -2.99|                -1.57|
|     27|                 -0.48|                 0.30|
|     28|                  0.76|                 0.91|
|     29|                  0.91|                 0.91|
|     30|                  0.91|                 0.91|
|     31|                  0.91|                 0.15|
|     32|                  0.15|                 0.15|
|     33|                  0.15|                 0.15|
|     34|                  0.15|                 0.15|
|     35|                  0.15|                 0.15|
|     36|                  0.15|                 0.15|
|     37|                  0.15|                -0.91|
|     38|                 -0.91|                -0.91|
|     39|                 -0.91|                -0.91|
|     40|                 -0.91|                -0.91|
|     41|                 -0.91|                -0.91|
|     42|                 -0.91|                -0.91|
|     43|                 -0.91|                -8.13|
|     44|                  2.18|                19.67|
|     45|                 -0.15|                -0.15|
|     46|                 -0.15|                -0.15|
|     47|                 -0.15|                -0.15|
|     48|                 -0.15|                -0.15|
-----------------------------------------------------
```

```
#######################################################
#           VERIFICAÇÃO DA FISSURAÇÃO (ELS)           #
#                      VmaxHmin                       #
#######################################################
-------------------------------------------------------
          ESFORÇOS CORTANTE NAS SEÇÕES DE INTERESSE
-------------------------------------------------------
|  SEÇÃO|          ESQUERDA (kN)|          DIREITA (kN)|
-------------------------------------------------------
|      1|                 21.10|                -47.91|
|      2|                -39.17|                -29.26|
|      3|                -20.51|                -10.81|
|      4|                 -2.16|                  7.58|
|      5|                 16.42|                 26.49|
|      6|                 35.79|                 46.38|
|      7|                 55.96|                -21.10|
|      8|                -21.10|                -21.10|
|      9|                -21.10|                -10.84|
|     10|                -10.84|                -10.84|
|     11|                -10.84|                -10.84|
|     12|                 23.77|                 53.43|
|     13|                 64.07|                -54.82|
|     14|                -37.80|                -37.80|
|     15|                -21.03|                -21.03|
|     16|                 -4.26|                 -4.26|
|     17|                 12.51|                 12.51|
|     18|                 29.28|                 29.28|
|     19|                 46.30|                -16.52|
|     20|                -11.49|                -11.49|
|     21|                 -5.96|                 -5.96|
|     22|                  0.06|                  0.06|
|     23|                  6.58|                  6.58|
|     24|                 13.59|                 13.59|
|     25|                 21.10|                -55.96|
|     26|                -46.38|                -35.79|
|     27|                -26.49|                -16.42|
|     28|                 -7.58|                  2.16|
|     29|                 10.81|                 20.51|
|     30|                 29.26|                 39.17|
|     31|                 47.91|                -21.10|
|     32|                -13.59|                -13.59|
|     33|                 -6.58|                 -6.58|
|     34|                 -0.06|                 -0.06|
|     35|                  5.96|                  5.96|
|     36|                 11.49|                 11.49|
|     37|                 16.52|                -46.30|
|     38|                -29.28|                -29.28|
|     39|                -12.51|                -12.51|
|     40|                  4.26|                  4.26|
|     41|                 21.03|                 21.03|
|     42|                 37.80|                 37.80|
|     43|                 54.82|                -64.07|
|     44|                -53.43|                -23.77|
|     45|                 10.84|                 10.84|
|     46|                 10.84|                 10.84|
|     47|                 10.84|                 21.10|
|     48|                 21.10|                 21.10|
-------------------------------------------------------
```

```
#####################################################
#           VERIFICAÇÃO DA FISSURAÇÃO (ELS)         #
#                      VminHmax                     #
#####################################################
-----------------------------------------------------
          ESFORÇOS CORTANTE NAS SEÇÕES DE INTERESSE
-----------------------------------------------------
|  SEÇÃO|          ESQUERDA (kN)|          DIREITA (kN)|
-----------------------------------------------------
|      1|                 33.31|               -45.46|
|      2|                -37.28|               -27.90|
|      3|                -19.64|               -10.44|
|      4|                 -2.30|                 6.88|
|      5|                 15.10|                24.45|
|      6|                 32.92|                42.55|
|      7|                 51.03|               -33.31|
|      8|                -33.31|               -33.31|
|      9|                -25.95|                -0.85|
|     10|                 -0.85|                -0.85|
|     11|                 -0.85|                -0.85|
|     12|                 14.58|                45.62|
|     13|                 62.13|               -49.27|
|     14|                -33.63|               -33.63|
|     15|                -18.24|               -18.24|
|     16|                 -2.86|                -2.86|
|     17|                 12.53|                12.53|
|     18|                 27.91|                27.91|
|     19|                 43.55|               -26.93|
|     20|                -18.70|               -18.70|
|     21|                 -9.75|                -9.75|
|     22|                 -0.07|                -0.07|
|     23|                 10.33|                10.33|
|     24|                 21.46|                21.46|
|     25|                 33.31|               -51.03|
|     26|                -42.55|               -32.92|
|     27|                -24.45|               -15.10|
|     28|                 -6.88|                 2.30|
|     29|                 10.44|                19.64|
|     30|                 27.90|                37.28|
|     31|                 45.46|               -33.31|
|     32|                -21.46|               -21.46|
|     33|                -10.33|               -10.33|
|     34|                  0.07|                 0.07|
|     35|                  9.75|                 9.75|
|     36|                 18.70|                18.70|
|     37|                 26.93|               -43.55|
|     38|                -27.91|               -27.91|
|     39|                -12.53|               -12.53|
|     40|                  2.86|                 2.86|
|     41|                 18.24|                18.24|
|     42|                 33.63|                33.63|
|     43|                 49.27|               -62.13|
|     44|                -45.62|               -14.58|
|     45|                  0.85|                 0.85|
|     46|                  0.85|                 0.85|
|     47|                  0.85|                25.95|
|     48|                 33.31|                33.31|
-----------------------------------------------------
```

```
#####################################################
#           VERIFICAÇÃO DA FISSURAÇÃO (ELS)         #
#                      VmaxHmax                     #
#####################################################
-----------------------------------------------------
          ESFORÇOS CORTANTE NAS SEÇÕES DE INTERESSE
-----------------------------------------------------
|  SEÇÃO|          ESQUERDA (kN)|          DIREITA (kN)|
-----------------------------------------------------
|      1|                 22.35|               -48.01|
|      2|                -39.25|               -29.34|
|      3|                -20.57|               -10.85|
|      4|                 -2.18|                 7.56|
|      5|                 16.41|                26.48|
|      6|                 35.76|                46.34|
|      7|                 55.88|               -22.35|
|      8|                -22.35|               -22.35|
|      9|                -22.35|                -9.86|
|     10|                 -9.86|                -9.86|
|     11|                 -9.86|                -9.86|
|     12|                 23.00|                53.06|
|     13|                 64.43|               -54.72|
|     14|                -37.70|               -37.70|
|     15|                -20.93|               -20.93|
|     16|                 -4.16|                -4.16|
|     17|                 12.61|                12.61|
|     18|                 29.39|                29.39|
|     19|                 46.41|               -17.81|
|     20|                -12.33|               -12.33|
|     21|                 -6.36|                -6.36|
|     22|                  0.10|                 0.10|
|     23|                  7.03|                 7.03|
|     24|                 14.45|                14.45|
|     25|                 22.35|               -55.88|
|     26|                -46.34|               -35.76|
|     27|                -26.48|               -16.41|
|     28|                 -7.56|                 2.18|
|     29|                 10.85|                20.57|
|     30|                 29.34|                39.25|
|     31|                 48.01|               -22.35|
|     32|                -14.45|               -14.45|
|     33|                 -7.03|                -7.03|
|     34|                 -0.10|                -0.10|
|     35|                  6.36|                 6.36|
|     36|                 12.33|                12.33|
|     37|                 17.81|               -46.41|
|     38|                -29.39|               -29.39|
|     39|                -12.61|               -12.61|
|     40|                  4.16|                 4.16|
|     41|                 20.93|                20.93|
|     42|                 37.70|                37.70|
|     43|                 54.72|               -64.43|
|     44|                -53.06|               -23.00|
|     45|                  9.86|                 9.86|
|     46|                  9.86|                 9.86|
|     47|                  9.86|                22.35|
|     48|                 22.35|                22.35|
-----------------------------------------------------
```

MOMENTO FLETOR

NOMENCLATURA DAS SEÇÕES PARA VERSÃO COMPLETA DO RELATÓRIO

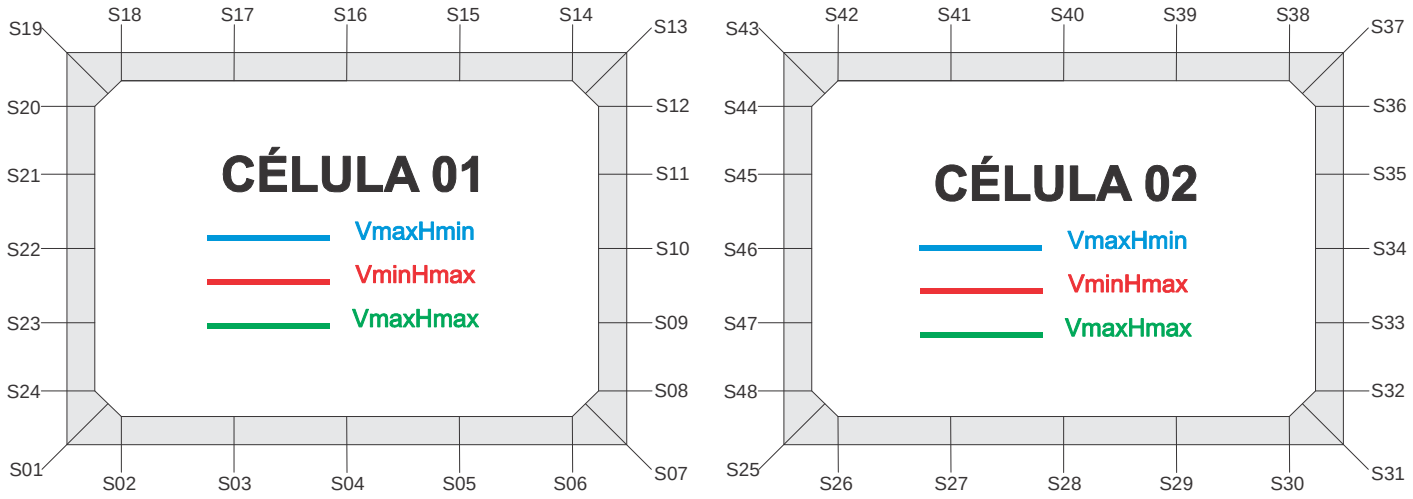

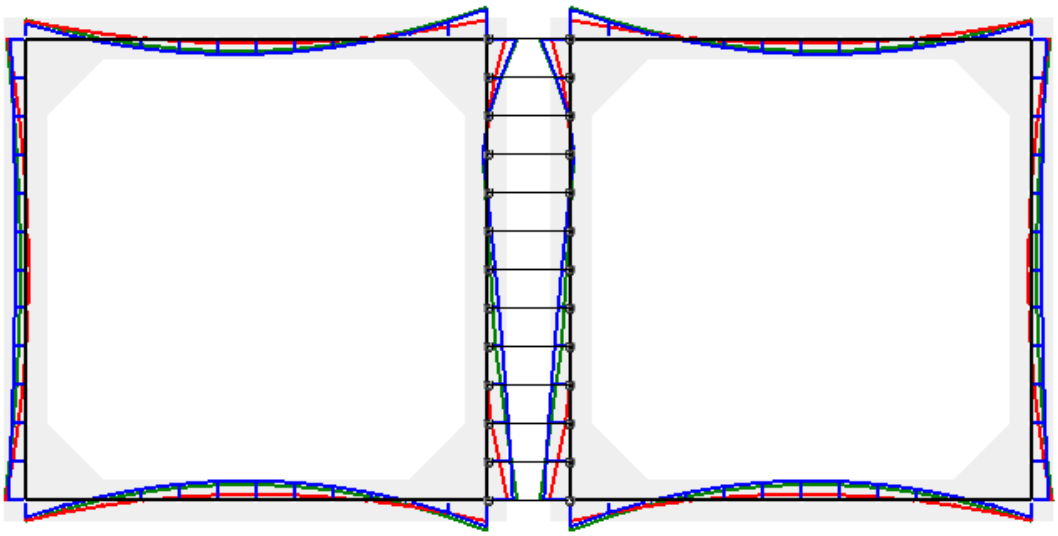

```
#######################################################
#            SOLICITAÇÕES NORMAIS (ELU)               #
#                      VmaxHmin                       #
#######################################################
-------------------------------------------------------
            MOMENTO FLETOR NAS SEÇÕES DE INTERESSE
-------------------------------------------------------
|  SEÇÃO|       ESQUERDA (kN.m)|       DIREITA (kN.m)|
-------------------------------------------------------
|      1|                -13.98|                13.98|
|      2|                 -3.33|                -3.33|
|      3|                -13.30|               -13.30|
|      4|                -16.01|               -16.01|
|      5|                -11.38|               -11.38|
|      6|                  0.97|                 0.97|
|      7|                 21.59|                21.59|
|      8|                 17.80|                17.80|
|      9|                 12.88|                12.88|
|     10|                  7.05|                 7.05|
|     11|                  0.54|                 0.54|
|     12|                  1.49|                 1.49|
|     13|                 24.00|               -24.00|
|     14|                 -4.90|                -4.90|
|     15|                  7.31|                 7.31|
|     16|                 12.69|                12.69|
|     17|                 11.23|                11.23|
|     18|                  2.92|                 2.92|
|     19|                -12.27|               -12.27|
|     20|                 -9.79|                -9.79|
|     21|                 -8.54|                -8.54|
|     22|                 -8.43|                -8.43|
|     23|                 -9.36|                -9.36|
|     24|                -11.24|               -11.24|
|     25|                -13.98|                21.59|
|     26|                  0.97|                 0.97|
|     27|                -11.38|               -11.38|
|     28|                -16.01|               -16.01|
|     29|                -13.30|               -13.30|
|     30|                 -3.33|                -3.33|
|     31|                 13.98|                13.98|
|     32|                 11.24|                11.24|
|     33|                  9.36|                 9.36|
|     34|                  8.43|                 8.43|
|     35|                  8.54|                 8.54|
|     36|                  9.79|                 9.79|
|     37|                 12.27|               -12.27|
|     38|                  2.92|                 2.92|
|     39|                 11.23|                11.23|
|     40|                 12.69|                12.69|
|     41|                  7.31|                 7.31|
|     42|                 -4.90|                -4.90|
|     43|                -24.00|               -24.00|
|     44|                 -1.49|                -1.49|
|     45|                 -0.54|                -0.54|
|     46|                 -7.05|                -7.05|
|     47|                -12.88|               -12.88|
|     48|                -17.80|               -17.80|
-------------------------------------------------------
```

```
#####################################################
#            SOLICITAÇÕES NORMAIS (ELU)             #
#                     VminHmax                      #
#####################################################
-----------------------------------------------------
            MOMENTO FLETOR NAS SEÇÕES DE INTERESSE
-----------------------------------------------------
|  SEÇÃO|       ESQUERDA (kN.m)|       DIREITA (kN.m)|
-----------------------------------------------------
|      1|                -16.57|                16.57|
|      2|                  4.53|                 4.53|
|      3|                 -2.62|                -2.62|
|      4|                 -4.93|                -4.93|
|      5|                 -2.43|                -2.43|
|      6|                  4.92|                 4.92|
|      7|                 17.19|                17.19|
|      8|                  4.04|                 4.04|
|      9|                 -0.24|                -0.24|
|     10|                 -0.24|                -0.24|
|     11|                 -0.24|                -0.24|
|     12|                  1.33|                 1.33|
|     13|                 15.38|               -15.38|
|     14|                 -4.64|                -4.64|
|     15|                  1.83|                 1.83|
|     16|                  4.08|                 4.08|
|     17|                  2.09|                 2.09|
|     18|                 -4.14|                -4.14|
|     19|                -14.62|               -14.62|
|     20|                 -5.34|                -5.34|
|     21|                  0.45|                 0.45|
|     22|                  2.48|                 2.48|
|     23|                  0.49|                 0.49|
|     24|                 -5.77|                -5.77|
|     25|                -16.57|                17.19|
|     26|                  4.92|                 4.92|
|     27|                 -2.43|                -2.43|
|     28|                 -4.93|                -4.93|
|     29|                 -2.62|                -2.62|
|     30|                  4.53|                 4.53|
|     31|                 16.57|                16.57|
|     32|                  5.77|                 5.77|
|     33|                 -0.49|                -0.49|
|     34|                 -2.48|                -2.48|
|     35|                 -0.45|                -0.45|
|     36|                  5.34|                 5.34|
|     37|                 14.62|               -14.62|
|     38|                 -4.14|                -4.14|
|     39|                  2.09|                 2.09|
|     40|                  4.08|                 4.08|
|     41|                  1.83|                 1.83|
|     42|                 -4.64|                -4.64|
|     43|                -15.38|               -15.38|
|     44|                 -1.33|                -1.33|
|     45|                  0.24|                 0.24|
|     46|                  0.24|                 0.24|
|     47|                  0.24|                 0.24|
|     48|                 -4.04|                -4.04|
-----------------------------------------------------
```

```
#####################################################
#            SOLICITAÇÕES NORMAIS (ELU)             #
#                     VmaxHmax                      #
#####################################################
-----------------------------------------------------
            MOMENTO FLETOR NAS SEÇÕES DE INTERESSE
-----------------------------------------------------
|  SEÇÃO|       ESQUERDA (kN.m)|       DIREITA (kN.m)|
-----------------------------------------------------
|      1|                -17.14|                17.14|
|      2|                 -0.37|                -0.37|
|      3|                -10.38|               -10.38|
|      4|                -12.99|               -12.99|
|      5|                 -8.17|                -8.17|
|      6|                  4.33|                 4.33|
|      7|                 24.87|                24.87|
|      8|                 16.05|                16.05|
|      9|                  7.23|                 7.23|
|     10|                  3.14|                 3.14|
|     11|                 -0.95|                -0.95|
|     12|                  1.71|                 1.71|
|     13|                 25.64|               -25.64|
|     14|                 -6.81|                -6.81|
|     15|                  5.14|                 5.14|
|     16|                 10.24|                10.24|
|     17|                  8.51|                 8.51|
|     18|                 -0.06|                -0.06|
|     19|                -15.52|               -15.52|
|     20|                 -9.39|                -9.39|
|     21|                 -5.58|                -5.58|
|     22|                 -4.28|                -4.28|
|     23|                 -5.66|                -5.66|
|     24|                 -9.89|                -9.89|
|     25|                -17.14|                24.87|
|     26|                  4.33|                 4.33|
|     27|                 -8.17|                -8.17|
|     28|                -12.99|               -12.99|
|     29|                -10.38|               -10.38|
|     30|                 -0.37|                -0.37|
|     31|                 17.14|                17.14|
|     32|                  9.89|                 9.89|
|     33|                  5.66|                 5.66|
|     34|                  4.28|                 4.28|
|     35|                  5.58|                 5.58|
|     36|                  9.39|                 9.39|
|     37|                 15.52|               -15.52|
|     38|                 -0.06|                -0.06|
|     39|                  8.51|                 8.51|
|     40|                 10.24|                10.24|
|     41|                  5.14|                 5.14|
|     42|                 -6.81|                -6.81|
|     43|                -25.64|               -25.64|
|     44|                 -1.71|                -1.71|
|     45|                  0.95|                 0.95|
|     46|                 -3.14|                -3.14|
|     47|                 -7.23|                -7.23|
|     48|                -16.05|               -16.05|
-----------------------------------------------------
```

```
#####################################################
#          SOLICITAÇÕES TANGENCIAIS (ELU)           #
#                      VmaxHmin                     #
#####################################################
-----------------------------------------------------
            MOMENTO FLETOR NAS SEÇÕES DE INTERESSE
-----------------------------------------------------
|  SEÇÃO|       ESQUERDA (kN.m)|       DIREITA (kN.m)|
-----------------------------------------------------
|      1|                -13.87|                13.87|
|      2|                 -4.04|                -4.04|
|      3|                -14.62|               -14.62|
|      4|                -17.99|               -17.99|
|      5|                -14.08|               -14.08|
|      6|                 -2.46|                -2.46|
|      7|                 17.47|                17.47|
|      8|                 13.99|                13.99|
|      9|                  9.38|                 9.38|
|     10|                  3.86|                 3.86|
|     11|                 -2.35|                -2.35|
|     12|                 -0.52|                -0.52|
|     13|                 22.09|               -22.09|
|     14|                 -3.59|                -3.59|
|     15|                  8.01|                 8.01|
|     16|                 12.78|                12.78|
|     17|                 10.71|                10.71|
|     18|                  1.80|                 1.80|
|     19|                -14.00|               -14.00|
|     20|                -11.22|               -11.22|
|     21|                 -9.66|                -9.66|
|     22|                 -9.24|                -9.24|
|     23|                 -9.86|                -9.86|
|     24|                -11.43|               -11.43|
|     25|                -13.87|                22.49|
|     26|                  1.07|                 1.07|
|     27|                -12.02|               -12.02|
|     28|                -17.38|               -17.38|
|     29|                -15.44|               -15.44|
|     30|                 -6.30|                -6.30|
|     31|                 10.15|                10.15|
|     32|                  7.42|                 7.42|
|     33|                  5.55|                 5.55|
|     34|                  4.63|                 4.63|
|     35|                  4.75|                 4.75|
|     36|                  6.01|                 6.01|
|     37|                  8.49|                -8.49|
|     38|                  5.85|                 5.85|
|     39|                 13.31|                13.31|
|     40|                 13.93|                13.93|
|     41|                  7.71|                 7.71|
|     42|                 -5.36|                -5.36|
|     43|                -25.30|               -25.30|
|     44|                 -3.00|                -3.00|
|     45|                 -1.47|                -1.47|
|     46|                 -7.97|                -7.97|
|     47|                -13.79|               -13.79|
|     48|                -18.71|               -18.71|
-----------------------------------------------------
```

```
#######################################################
#          SOLICITAÇÕES TANGENCIAIS (ELU)             #
#                      VminHmax                       #
#######################################################
-------------------------------------------------------
            MOMENTO FLETOR NAS SEÇÕES DE INTERESSE
-------------------------------------------------------
|  SEÇÃO|       ESQUERDA (kN.m)|       DIREITA (kN.m)|
-------------------------------------------------------
|      1|                -16.68|                16.68|
|      2|                  4.52|                 4.52|
|      3|                 -2.76|                -2.76|
|      4|                 -5.21|                -5.21|
|      5|                 -2.85|                -2.85|
|      6|                  4.37|                 4.37|
|      7|                 16.50|                16.50|
|      8|                  3.38|                 3.38|
|      9|                 -0.28|                -0.28|
|     10|                 -0.32|                -0.32|
|     11|                 -0.36|                -0.36|
|     12|                  0.70|                 0.70|
|     13|                 14.89|               -14.89|
|     14|                 -4.28|                -4.28|
|     15|                  2.07|                 2.07|
|     16|                  4.19|                 4.19|
|     17|                  2.07|                 2.07|
|     18|                 -4.27|                -4.27|
|     19|                -14.89|               -14.89|
|     20|                 -5.58|                -5.58|
|     21|                  0.23|                 0.23|
|     22|                  2.29|                 2.29|
|     23|                  0.33|                 0.33|
|     24|                 -5.91|                -5.91|
|     25|                -16.68|                17.06|
|     26|                  4.76|                 4.76|
|     27|                 -2.63|                -2.63|
|     28|                 -5.15|                -5.15|
|     29|                 -2.88|                -2.88|
|     30|                  4.24|                 4.24|
|     31|                 16.23|                16.23|
|     32|                  5.44|                 5.44|
|     33|                 -0.82|                -0.82|
|     34|                 -2.80|                -2.80|
|     35|                 -0.77|                -0.77|
|     36|                  5.02|                 5.02|
|     37|                 14.31|               -14.31|
|     38|                 -3.87|                -3.87|
|     39|                  2.31|                 2.31|
|     40|                  4.26|                 4.26|
|     41|                  1.98|                 1.98|
|     42|                 -4.53|                -4.53|
|     43|                -15.31|               -15.31|
|     44|                 -1.15|                -1.15|
|     45|                 -0.11|                -0.11|
|     46|                 -0.17|                -0.17|
|     47|                 -0.23|                -0.23|
|     48|                 -3.91|                -3.91|
-------------------------------------------------------
```

```
#######################################################
#          SOLICITAÇÕES TANGENCIAIS (ELU)             #
#                      VmaxHmax                       #
#######################################################
-------------------------------------------------------
            MOMENTO FLETOR NAS SEÇÕES DE INTERESSE
-------------------------------------------------------
|  SEÇÃO|       ESQUERDA (kN.m)|       DIREITA (kN.m)|
-------------------------------------------------------
|      1|                -17.35|                17.35|
|      2|                 -0.68|                -0.68|
|      3|                -11.24|               -11.24|
|      4|                -14.44|               -14.44|
|      5|                -10.26|               -10.26|
|      6|                  1.61|                 1.61|
|      7|                 21.57|                21.57|
|      8|                 12.91|                12.91|
|      9|                  4.25|                 4.25|
|     10|                  1.28|                 1.28|
|     11|                 -1.70|                -1.70|
|     12|                  0.44|                 0.44|
|     13|                 23.78|               -23.78|
|     14|                 -5.46|                -5.46|
|     15|                  5.98|                 5.98|
|     16|                 10.57|                10.57|
|     17|                  8.33|                 8.33|
|     18|                 -0.75|                -0.75|
|     19|                -16.72|               -16.72|
|     20|                -10.42|               -10.42|
|     21|                 -6.45|                -6.45|
|     22|                 -4.99|                -4.99|
|     23|                 -6.20|                -6.20|
|     24|                -10.26|               -10.26|
|     25|                -17.35|                25.08|
|     26|                  4.08|                 4.08|
|     27|                 -8.82|                -8.82|
|     28|                -14.03|               -14.03|
|     29|                -11.84|               -11.84|
|     30|                 -2.30|                -2.30|
|     31|                 14.71|                14.71|
|     32|                  7.40|                 7.40|
|     33|                  3.12|                 3.12|
|     34|                  1.69|                 1.69|
|     35|                  2.94|                 2.94|
|     36|                  6.69|                 6.69|
|     37|                 12.77|               -12.77|
|     38|                  2.17|                 2.17|
|     39|                 10.23|                10.23|
|     40|                 11.45|                11.45|
|     41|                  5.83|                 5.83|
|     42|                 -6.64|                -6.64|
|     43|                -25.98|               -25.98|
|     44|                 -2.86|                -2.86|
|     45|                 -0.94|                -0.94|
|     46|                 -4.14|                -4.14|
|     47|                 -7.33|                -7.33|
|     48|                -16.21|               -16.21|
-------------------------------------------------------
```

```
#####################################################
#             VERIFICAÇÃO DA FADIGA (ELS)           #
#                      VmaxHmin                     #
#####################################################
-----------------------------------------------------
            MOMENTO FLETOR NAS SEÇÕES DE INTERESSE
-----------------------------------------------------
|  SEÇÃO|       ESQUERDA (kN.m)|       DIREITA (kN.m)|
-----------------------------------------------------
|      1|                -11.88|                11.88|
|      2|                 -0.60|                -0.60|
|      3|                 -7.72|                -7.72|
|      4|                 -9.58|                -9.58|
|      5|                 -6.14|                -6.14|
|      6|                  2.80|                 2.80|
|      7|                 17.50|                17.50|
|      8|                 11.70|                11.70|
|      9|                  5.91|                 5.91|
|     10|                  2.59|                 2.59|
|     11|                 -0.72|                -0.72|
|     12|                  1.12|                 1.12|
|     13|                 18.07|               -18.07|
|     14|                 -4.69|                -4.69|
|     15|                  3.82|                 3.82|
|     16|                  7.48|                 7.48|
|     17|                  6.31|                 6.31|
|     18|                  0.29|                 0.29|
|     19|                -10.60|               -10.60|
|     20|                 -6.73|                -6.73|
|     21|                 -4.31|                -4.31|
|     22|                 -3.48|                -3.48|
|     23|                 -4.37|                -4.37|
|     24|                 -7.13|                -7.13|
|     25|                -11.88|                17.50|
|     26|                  2.80|                 2.80|
|     27|                 -6.14|                -6.14|
|     28|                 -9.58|                -9.58|
|     29|                 -7.72|                -7.72|
|     30|                 -0.60|                -0.60|
|     31|                 11.88|                11.88|
|     32|                  7.13|                 7.13|
|     33|                  4.37|                 4.37|
|     34|                  3.48|                 3.48|
|     35|                  4.31|                 4.31|
|     36|                  6.73|                 6.73|
|     37|                 10.60|               -10.60|
|     38|                  0.29|                 0.29|
|     39|                  6.31|                 6.31|
|     40|                  7.48|                 7.48|
|     41|                  3.82|                 3.82|
|     42|                 -4.69|                -4.69|
|     43|                -18.07|               -18.07|
|     44|                 -1.12|                -1.12|
|     45|                  0.72|                 0.72|
|     46|                 -2.59|                -2.59|
|     47|                 -5.91|                -5.91|
|     48|                -11.70|               -11.70|
-----------------------------------------------------
```

```
#####################################################
#             VERIFICAÇÃO DA FADIGA (ELS)           #
#                      VminHmax                     #
#####################################################
-----------------------------------------------------
            MOMENTO FLETOR NAS SEÇÕES DE INTERESSE
-----------------------------------------------------
|  SEÇÃO|       ESQUERDA (kN.m)|       DIREITA (kN.m)|
-----------------------------------------------------
|      1|                -13.60|                13.60|
|      2|                  2.18|                 2.18|
|      3|                 -4.40|                -4.40|
|      4|                 -6.19|                -6.19|
|      5|                 -3.20|                -3.20|
|      6|                  4.65|                 4.65|
|      7|                 17.48|                17.48|
|      8|                  8.01|                 8.01|
|      9|                  0.08|                 0.08|
|     10|                 -0.12|                -0.12|
|     11|                 -0.31|                -0.31|
|     12|                  1.56|                 1.56|
|     13|                 16.33|               -16.33|
|     14|                 -4.98|                -4.98|
|     15|                  2.10|                 2.10|
|     16|                  4.96|                 4.96|
|     17|                  3.58|                 3.58|
|     18|                 -2.03|                -2.03|
|     19|                -11.90|               -11.90|
|     20|                 -5.35|                -5.35|
|     21|                 -1.27|                -1.27|
|     22|                  0.14|                 0.14|
|     23|                 -1.31|                -1.31|
|     24|                 -5.83|                -5.83|
|     25|                -13.60|                17.48|
|     26|                  4.65|                 4.65|
|     27|                 -3.20|                -3.20|
|     28|                 -6.19|                -6.19|
|     29|                 -4.40|                -4.40|
|     30|                  2.18|                 2.18|
|     31|                 13.60|                13.60|
|     32|                  5.83|                 5.83|
|     33|                  1.31|                 1.31|
|     34|                 -0.14|                -0.14|
|     35|                  1.27|                 1.27|
|     36|                  5.35|                 5.35|
|     37|                 11.90|               -11.90|
|     38|                 -2.03|                -2.03|
|     39|                  3.58|                 3.58|
|     40|                  4.96|                 4.96|
|     41|                  2.10|                 2.10|
|     42|                 -4.98|                -4.98|
|     43|                -16.33|               -16.33|
|     44|                 -1.56|                -1.56|
|     45|                  0.31|                 0.31|
|     46|                  0.12|                 0.12|
|     47|                 -0.08|                -0.08|
|     48|                 -8.01|                -8.01|
-----------------------------------------------------
```

```
#####################################################
#             VERIFICAÇÃO DA FADIGA (ELS)           #
#                      VmaxHmax                     #
#####################################################
-----------------------------------------------------
            MOMENTO FLETOR NAS SEÇÕES DE INTERESSE
-----------------------------------------------------
|  SEÇÃO|       ESQUERDA (kN.m)|       DIREITA (kN.m)|
-----------------------------------------------------
|      1|                -12.28|                12.28|
|      2|                 -0.23|                -0.23|
|      3|                 -7.39|                -7.39|
|      4|                 -9.26|                -9.26|
|      5|                 -5.82|                -5.82|
|      6|                  3.11|                 3.11|
|      7|                 17.78|                17.78|
|      8|                 11.44|                11.44|
|      9|                  5.10|                 5.10|
|     10|                  2.21|                 2.21|
|     11|                 -0.67|                -0.67|
|     12|                  1.21|                 1.21|
|     13|                 18.16|               -18.16|
|     14|                 -4.83|                -4.83|
|     15|                  3.63|                 3.63|
|     16|                  7.25|                 7.25|
|     17|                  6.03|                 6.03|
|     18|                 -0.03|                -0.03|
|     19|                -10.97|               -10.97|
|     20|                 -6.63|                -6.63|
|     21|                 -3.94|                -3.94|
|     22|                 -3.03|                -3.03|
|     23|                 -4.03|                -4.03|
|     24|                 -7.07|                -7.07|
|     25|                -12.28|                17.78|
|     26|                  3.11|                 3.11|
|     27|                 -5.82|                -5.82|
|     28|                 -9.26|                -9.26|
|     29|                 -7.39|                -7.39|
|     30|                 -0.23|                -0.23|
|     31|                 12.28|                12.28|
|     32|                  7.07|                 7.07|
|     33|                  4.03|                 4.03|
|     34|                  3.03|                 3.03|
|     35|                  3.94|                 3.94|
|     36|                  6.63|                 6.63|
|     37|                 10.97|               -10.97|
|     38|                 -0.03|                -0.03|
|     39|                  6.03|                 6.03|
|     40|                  7.25|                 7.25|
|     41|                  3.63|                 3.63|
|     42|                 -4.83|                -4.83|
|     43|                -18.16|               -18.16|
|     44|                 -1.21|                -1.21|
|     45|                  0.67|                 0.67|
|     46|                 -2.21|                -2.21|
|     47|                 -5.10|                -5.10|
|     48|                -11.44|               -11.44|
-----------------------------------------------------
```

```
#######################################################
#             VERIFICAÇÃO DA FADIGA (ELS)             #
#                      VminHmin                       #
#######################################################
-------------------------------------------------------
            MOMENTO FLETOR NAS SEÇÕES DE INTERESSE
-------------------------------------------------------
|  SEÇÃO|       ESQUERDA (kN.m)|       DIREITA (kN.m)|
-------------------------------------------------------
|      1|                -12.00|                12.00|
|      2|                 -0.18|                -0.18|
|      3|                 -7.21|                -7.21|
|      4|                 -9.36|                -9.36|
|      5|                 -6.82|                -6.82|
|      6|                  0.39|                 0.39|
|      7|                 12.33|                12.33|
|      8|                  7.66|                 7.66|
|      9|                  4.99|                 4.99|
|     10|                  4.18|                 4.18|
|     11|                  5.09|                 5.09|
|     12|                  4.86|                 4.86|
|     13|                  9.59|                -9.59|
|     14|                  0.75|                 0.75|
|     15|                  6.82|                 6.82|
|     16|                  8.67|                 8.67|
|     17|                  6.28|                 6.28|
|     18|                 -0.34|                -0.34|
|     19|                -11.22|               -11.22|
|     20|                 -7.27|                -7.27|
|     21|                 -4.76|                -4.76|
|     22|                 -3.85|                -3.85|
|     23|                 -4.66|                -4.66|
|     24|                 -7.33|                -7.33|
|     25|                -12.00|                 0.62|
|     26|                 -0.44|                -0.44|
|     27|                 -0.72|                -0.72|
|     28|                 -0.58|                -0.58|
|     29|                 -0.33|                -0.33|
|     30|                 -0.08|                -0.08|
|     31|                  0.17|                 0.17|
|     32|                  0.21|                 0.21|
|     33|                  0.25|                 0.25|
|     34|                  0.30|                 0.30|
|     35|                  0.34|                 0.34|
|     36|                  0.38|                 0.38|
|     37|                  0.42|                -0.42|
|     38|                 -0.17|                -0.17|
|     39|                  0.08|                 0.08|
|     40|                  0.33|                 0.33|
|     41|                  0.58|                 0.58|
|     42|                  0.83|                 0.83|
|     43|                  1.08|                 1.08|
|     44|                  1.90|                 1.90|
|     45|                 -0.79|                -0.79|
|     46|                 -0.74|                -0.74|
|     47|                 -0.70|                -0.70|
|     48|                 -0.66|                -0.66|
-------------------------------------------------------
```

```
#####################################################
#           VERIFICAÇÃO DA FISSURAÇÃO (ELS)         #
#                      VmaxHmin                     #
#####################################################
-----------------------------------------------------
            MOMENTO FLETOR NAS SEÇÕES DE INTERESSE
-----------------------------------------------------
|  SEÇÃO|       ESQUERDA (kN.m)|       DIREITA (kN.m)|
-----------------------------------------------------
|      1|                -11.56|                11.56|
|      2|                 -0.41|                -0.41|
|      3|                 -7.25|                -7.25|
|      4|                 -9.04|                -9.04|
|      5|                 -5.74|                -5.74|
|      6|                  2.83|                 2.83|
|      7|                 16.90|                16.90|
|      8|                 11.09|                11.09|
|      9|                  5.29|                 5.29|
|     10|                  2.31|                 2.31|
|     11|                 -0.67|                -0.67|
|     12|                  1.11|                 1.11|
|     13|                 17.27|               -17.27|
|     14|                 -4.53|                -4.53|
|     15|                  3.56|                 3.56|
|     16|                  7.04|                 7.04|
|     17|                  5.90|                 5.90|
|     18|                  0.16|                 0.16|
|     19|                -10.23|               -10.23|
|     20|                 -6.37|                -6.37|
|     21|                 -3.96|                -3.96|
|     22|                 -3.14|                -3.14|
|     23|                 -4.04|                -4.04|
|     24|                 -6.81|                -6.81|
|     25|                -11.56|                16.90|
|     26|                  2.83|                 2.83|
|     27|                 -5.74|                -5.74|
|     28|                 -9.04|                -9.04|
|     29|                 -7.25|                -7.25|
|     30|                 -0.41|                -0.41|
|     31|                 11.56|                11.56|
|     32|                  6.81|                 6.81|
|     33|                  4.04|                 4.04|
|     34|                  3.14|                 3.14|
|     35|                  3.96|                 3.96|
|     36|                  6.37|                 6.37|
|     37|                 10.23|               -10.23|
|     38|                  0.16|                 0.16|
|     39|                  5.90|                 5.90|
|     40|                  7.04|                 7.04|
|     41|                  3.56|                 3.56|
|     42|                 -4.53|                -4.53|
|     43|                -17.27|               -17.27|
|     44|                 -1.11|                -1.11|
|     45|                  0.67|                 0.67|
|     46|                 -2.31|                -2.31|
|     47|                 -5.29|                -5.29|
|     48|                -11.09|               -11.09|
-----------------------------------------------------
```

```
#####################################################
#           VERIFICAÇÃO DA FISSURAÇÃO (ELS)         #
#                      VminHmax                     #
#####################################################
-----------------------------------------------------
            MOMENTO FLETOR NAS SEÇÕES DE INTERESSE
-----------------------------------------------------
|  SEÇÃO|       ESQUERDA (kN.m)|       DIREITA (kN.m)|
-----------------------------------------------------
|      1|                -13.34|                13.34|
|      2|                  1.97|                 1.97|
|      3|                 -4.57|                -4.57|
|      4|                 -6.32|                -6.32|
|      5|                 -3.30|                -3.30|
|      6|                  4.59|                 4.59|
|      7|                 17.46|                17.46|
|      8|                  8.30|                 8.30|
|      9|                  0.15|                 0.15|
|     10|                 -0.09|                -0.09|
|     11|                 -0.32|                -0.32|
|     12|                  1.57|                 1.57|
|     13|                 16.38|               -16.38|
|     14|                 -4.98|                -4.98|
|     15|                  2.15|                 2.15|
|     16|                  5.05|                 5.05|
|     17|                  3.72|                 3.72|
|     18|                 -1.84|                -1.84|
|     19|                -11.67|               -11.67|
|     20|                 -5.38|                -5.38|
|     21|                 -1.45|                -1.45|
|     22|                 -0.08|                -0.08|
|     23|                 -1.48|                -1.48|
|     24|                 -5.83|                -5.83|
|     25|                -13.34|                17.46|
|     26|                  4.59|                 4.59|
|     27|                 -3.30|                -3.30|
|     28|                 -6.32|                -6.32|
|     29|                 -4.57|                -4.57|
|     30|                  1.97|                 1.97|
|     31|                 13.34|                13.34|
|     32|                  5.83|                 5.83|
|     33|                  1.48|                 1.48|
|     34|                  0.08|                 0.08|
|     35|                  1.45|                 1.45|
|     36|                  5.38|                 5.38|
|     37|                 11.67|               -11.67|
|     38|                 -1.84|                -1.84|
|     39|                  3.72|                 3.72|
|     40|                  5.05|                 5.05|
|     41|                  2.15|                 2.15|
|     42|                 -4.98|                -4.98|
|     43|                -16.38|               -16.38|
|     44|                 -1.57|                -1.57|
|     45|                  0.32|                 0.32|
|     46|                  0.09|                 0.09|
|     47|                 -0.15|                -0.15|
|     48|                 -8.30|                -8.30|
-----------------------------------------------------
```

```
#####################################################
#           VERIFICAÇÃO DA FISSURAÇÃO (ELS)         #
#                      VmaxHmax                     #
#####################################################
-----------------------------------------------------
            MOMENTO FLETOR NAS SEÇÕES DE INTERESSE
-----------------------------------------------------
|  SEÇÃO|       ESQUERDA (kN.m)|       DIREITA (kN.m)|
-----------------------------------------------------
|      1|                -11.82|                11.82|
|      2|                 -0.18|                -0.18|
|      3|                 -7.04|                -7.04|
|      4|                 -8.83|                -8.83|
|      5|                 -5.54|                -5.54|
|      6|                  3.02|                 3.02|
|      7|                 17.08|                17.08|
|      8|                 10.93|                10.93|
|      9|                  4.78|                 4.78|
|     10|                  2.07|                 2.07|
|     11|                 -0.64|                -0.64|
|     12|                  1.17|                 1.17|
|     13|                 17.32|               -17.32|
|     14|                 -4.62|                -4.62|
|     15|                  3.44|                 3.44|
|     16|                  6.89|                 6.89|
|     17|                  5.73|                 5.73|
|     18|                 -0.04|                -0.04|
|     19|                -10.47|               -10.47|
|     20|                 -6.31|                -6.31|
|     21|                 -3.73|                -3.73|
|     22|                 -2.86|                -2.86|
|     23|                 -3.83|                -3.83|
|     24|                 -6.77|                -6.77|
|     25|                -11.82|                17.08|
|     26|                  3.02|                 3.02|
|     27|                 -5.54|                -5.54|
|     28|                 -8.83|                -8.83|
|     29|                 -7.04|                -7.04|
|     30|                 -0.18|                -0.18|
|     31|                 11.82|                11.82|
|     32|                  6.77|                 6.77|
|     33|                  3.83|                 3.83|
|     34|                  2.86|                 2.86|
|     35|                  3.73|                 3.73|
|     36|                  6.31|                 6.31|
|     37|                 10.47|               -10.47|
|     38|                 -0.04|                -0.04|
|     39|                  5.73|                 5.73|
|     40|                  6.89|                 6.89|
|     41|                  3.44|                 3.44|
|     42|                 -4.62|                -4.62|
|     43|                -17.32|               -17.32|
|     44|                 -1.17|                -1.17|
|     45|                  0.64|                 0.64|
|     46|                 -2.07|                -2.07|
|     47|                 -4.78|                -4.78|
|     48|                -10.93|               -10.93|
-----------------------------------------------------
```

ARMADURAS P/ SOLICITAÇÕES NORMAIS

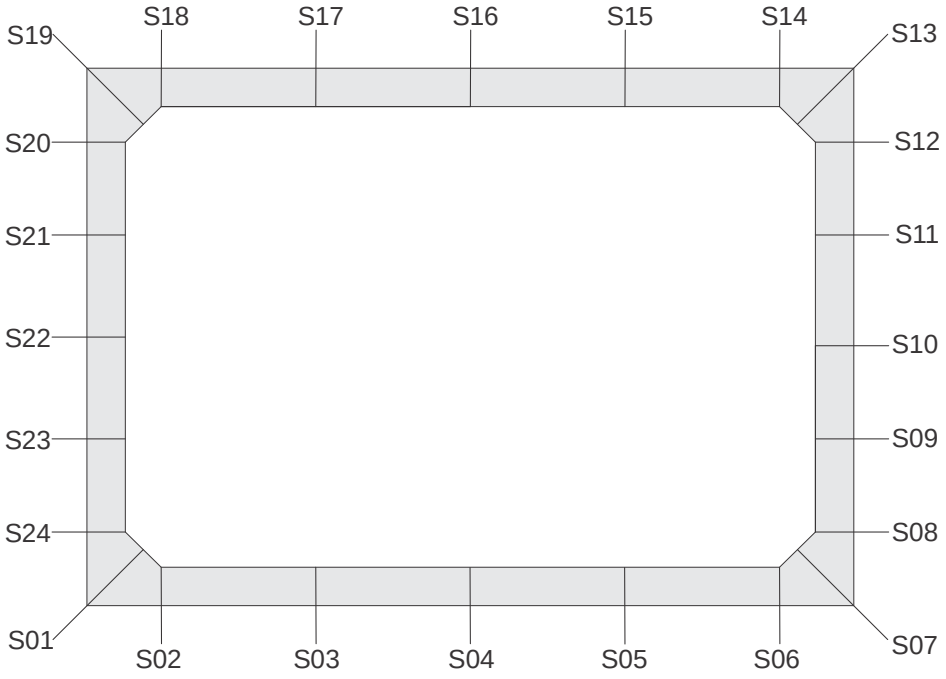

Seção	As-CA60ext(cm²/m)	As-CA50ext(cm²/m)	As-CA60int(cm²/m)	As-CA50int(cm²/m)
1	5.47	6.57	1.26	1.26
2	2.32	2.79	2.32	2.79
3	2.32	2.79	2.32	2.79
4	2.32	2.79	2.71	3.25
5	2.32	2.79	2.32	2.79
6	2.32	2.79	2.32	2.79
7	5.47	6.57	1.26	1.26
8	2.32	2.79	2.32	2.79
9	2.32	2.79	2.32	2.79
10	2.32	2.79	2.32	2.79
11	2.32	2.79	2.32	2.79
12	2.32	2.79	2.32	2.79
13	5.47	6.57	1.26	1.26
14	2.32	2.79	2.32	2.79
15	2.32	2.79	2.32	2.79
16	2.32	2.79	2.32	2.79
17	2.32	2.79	2.32	2.79
18	2.32	2.79	2.32	2.79
19	5.47	6.57	1.26	1.26
20	2.32	2.79	2.32	2.79
21	2.32	2.79	2.32	2.79
22	2.32	2.79	2.32	2.79
23	2.32	2.79	2.32	2.79
24	2.32	2.79	2.32	2.79

NOTA: A tabela acima mostra as áreas de aço calculadas para parte interna e externa das seções de interesse. Estas áreas são mostradas para o caso de se utilizar apenas aço do tipo CA60 (As-CA60ext e As-CA60int) e os correspondentes valores para o caso de se utilizar apenas aço do tipo CA50 (As-CA50ext e As-CA50int). Possibilitando os cálculos para o uso combinado dos tipos de aço: CA60 contido nas telas soldadas e o CA50 presentes nas barras.

VERIFICAÇÃO DA FADIGA

Seção	Nsdmax(kN)	Msdmax(kN.m)	Nsdmin(kN)	Msdmin(kN.m)	DSs(MPa)	Asad(cm²/m)
12	-58.69	1.21	-46.70	4.86	-62.53	0.00
13	-57.41	18.16	-16.85	9.59	29.50	0.00
14	-18.62	4.83	-16.85	0.75	63.45	0.00
16	-16.55	7.48	-28.10	4.96	106.04	0.00
18	-18.62	0.03	-16.85	0.34	-5.58	0.00
19	-48.70	10.97	-16.85	11.22	-18.45	0.00
20	-49.98	6.63	-48.68	7.27	-10.46	0.00

NOTA:
* A armadura adicional referente à fadiga necessariamente é nula quando a altura de aterro supera 1.5 m.

VERIFICAÇÃO DA CORTANTE

Seção	fck(MPa)	fcd(MPa)	fctm(MPa)	fctk,inf(MPa)	fctd(MPa)	Trd(MPa)
1	30.00	23.08	2.90	2.03	1.56	0.39
2	30.00	23.08	2.90	2.03	1.56	0.39
6	30.00	23.08	2.90	2.03	1.56	0.39
7	30.00	23.08	2.90	2.03	1.56	0.39
13	30.00	23.08	2.90	2.03	1.56	0.39
14	30.00	23.08	2.90	2.03	1.56	0.39
18	30.00	23.08	2.90	2.03	1.56	0.39
19	30.00	23.08	2.90	2.03	1.56	0.39

Seção	As(cm²/m)	ro	Vsd(kN)	Vrd1(kN)	Vrd2(kN)	Asw(cm²/m/m)
1	6.57	2.12E-003	62.03	193.98	0.00	0.00
2	2.79	2.53E-003	55.59	77.91	0.00	0.00
6	2.79	2.53E-003	61.47	77.91	0.00	0.00
7	6.57	2.12E-003	68.71	188.56	0.00	0.00
13	6.57	2.12E-003	64.39	189.72	0.00	0.00
14	2.79	2.53E-003	42.74	78.78	0.00	0.00
18	2.79	2.53E-003	38.54	78.78	0.00	0.00
19	6.57	2.12E-003	51.14	190.93	0.00	0.00

OBSERVAÇÃO: A verificação da resistência à força cortante é feita a uma distância d/2 das seções das mísulas.

VERIFICAÇÃO DA FISSURAÇÃO

VmaxHmin

Seção	As(cm²/m)	Nsd(kN)	Msd(kN.m)	Ø(mm)	w(mm)
1	6.57	-10.55	11.56	6.30	0.004
2	2.79	-21.10	0.41	6.30	0.000
3	2.79	-21.10	7.25	6.30	0.062
4	3.25	-21.10	9.04	6.30	0.074
5	2.79	-21.10	5.74	6.30	0.036
6	2.79	-21.10	2.83	6.30	0.006
7	6.57	-41.31	16.90	6.30	0.007
8	2.79	-60.23	11.09	6.30	0.118
9	2.79	-59.20	5.29	6.30	0.015
10	2.79	-58.17	2.31	6.30	0.000
11	2.79	-57.14	0.67	6.30	0.000
12	2.79	-56.11	1.11	6.30	0.000
13	6.57	-35.67	17.27	6.30	0.008
14	2.79	-16.52	4.53	6.30	0.023
15	2.79	-16.52	3.56	6.30	0.013
16	2.79	-16.52	7.04	6.30	0.061
17	2.79	-16.52	5.90	6.30	0.041
18	2.79	-16.52	0.16	6.30	0.000
19	6.57	-31.41	10.23	6.30	0.002
20	2.79	-47.58	6.37	6.30	0.032
21	2.79	-48.61	3.96	6.30	0.008
22	2.79	-49.64	3.14	6.30	0.003
23	2.79	-50.68	4.04	6.30	0.008
24	2.79	-51.71	6.81	6.30	0.036

VminHmax

Seção	As(cm²/m)	Nsd(kN)	Msd(kN.m)	Ø(mm)	w(mm)
1	6.57	-16.66	13.34	6.30	0.006
2	2.79	-33.31	1.97	6.30	0.001
3	2.79	-33.31	4.57	6.30	0.017
4	3.25	-33.31	6.32	6.30	0.029
5	2.79	-33.31	3.30	6.30	0.007
6	2.79	-33.31	4.59	6.30	0.017
7	6.57	-44.63	17.46	6.30	0.007
8	2.79	-54.67	8.30	6.30	0.060
9	2.79	-53.64	0.15	6.30	0.000
10	2.79	-52.61	0.09	6.30	0.000
11	2.79	-51.58	0.32	6.30	0.000
12	2.79	-50.55	1.57	6.30	0.000
13	6.57	-38.10	16.38	6.30	0.007
14	2.79	-26.93	4.98	6.30	0.024
15	2.79	-26.93	2.15	6.30	0.002
16	2.79	-26.93	5.05	6.30	0.025
17	2.79	-26.93	3.72	6.30	0.011
18	2.79	-26.93	1.84	6.30	0.001
19	6.57	-35.24	11.67	6.30	0.003
20	2.79	-44.83	5.38	6.30	0.021
21	2.79	-45.86	1.45	6.30	0.000
22	2.79	-46.89	0.08	6.30	0.000
23	2.79	-47.93	1.48	6.30	0.000
24	2.79	-48.96	5.83	6.30	0.025

VERIFICAÇÃO DA FISSURAÇÃO (CONT.)

VmaxHmax

Seção	As(cm²/m)	Nsd(kN)	Msd(kN.m)	Ø(mm)	w(mm)
1	6.57	-11.17	11.82	6.30	0.005
2	2.79	-22.35	0.18	6.30	0.000
3	2.79	-22.35	7.04	6.30	0.057
4	3.25	-22.35	8.83	6.30	0.069
5	2.79	-22.35	5.54	6.30	0.033
6	2.79	-22.35	3.02	6.30	0.007
7	6.57	-41.88	17.08	6.30	0.007
8	2.79	-60.12	10.93	6.30	0.114
9	2.79	-59.09	4.78	6.30	0.011
10	2.79	-58.06	2.07	6.30	0.000
11	2.79	-57.03	0.64	6.30	0.000
12	2.79	-56.00	1.17	6.30	0.000
13	6.57	-36.27	17.32	6.30	0.008
14	2.79	-17.81	4.62	6.30	0.023
15	2.79	-17.81	3.44	6.30	0.012
16	2.79	-17.81	6.89	6.30	0.057
17	2.79	-17.81	5.73	6.30	0.038
18	2.79	-17.81	0.04	6.30	0.000
19	6.57	-32.11	10.47	6.30	0.002
20	2.79	-47.69	6.31	6.30	0.031
21	2.79	-48.72	3.73	6.30	0.006
22	2.79	-49.75	2.86	6.30	0.002
23	2.79	-50.78	3.83	6.30	0.006
24	2.79	-51.81	6.77	6.30	0.036

NOTA:
* Seção com aumento na armadura devido à fissuração.